RP GROUP
SOLUTIONS IN SAFETY + LIGHTING

Art.-Nr: DOS029ML
Emergency light Centralised power supply systems Universal, Central power supply (ML), CPS, IP20, Polycarbonate, Transparent

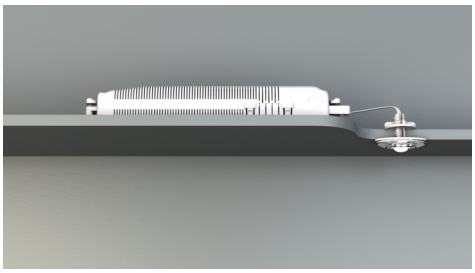

Small LED safety luminaire, for recessed and surface mounting, with great effect. The small dimensions and transparent housing material make completely unobtrusive mounting possible.

This variant is intended for installation in existing luminaire housings. The mounting plate/clips, as well as the emergency light technology, are supplied.

Control and monitoring via central power supply system.

More information
www.rp-group.com/en/item/DOS029ML

TECHNICAL DATA

Luminaire type	Emergency light
Mounting	Universal
Pictograph	No
Illuminant	LED
Housing material	Polycarbonate
Housing color	Transparent
Protection type (IP)	IP20
Impact resistance (IK)	≥ 3
Certification	Waste disposal, CE, Type-tested, ENEC
Insulation class	2
Supply	Centralised power supply systems
Monitoring	Central power supply (ML)
Bridging time	CPS
Battery	/
Operating mode	single luminaire switching
Input voltage AC	230 V
Input frequency	50 / 60 Hz
Input voltage DC	216 V
Power max.	2,8 W

Power maintained	2,8 W
Power non-maintained	1,1 W
Ambient temperature maintained mode	-20 °C to 40 °C
Ambient temperature non-maintained mode	-20 °C to 40 °C
Depth	24 mm
Width	50 mm
Height	12 mm
Installation dimensions Diameter	10.5 mm
Weight	0.1
Weight incl. packaging	0.18
Connection cross-section	2.5 mm²
Switching input	Yes
Emergency light blocking	No
Battery connection	No
Dimming function	Yes
Luminous flux mains	140 lm
Luminous flux emergency	140 lm
Customs tariff number	94056120
GTIN	4260123683658

RP GROUP
SOLUTIONS IN SAFETY + LIGHTING

TECHNICAL DRAWING

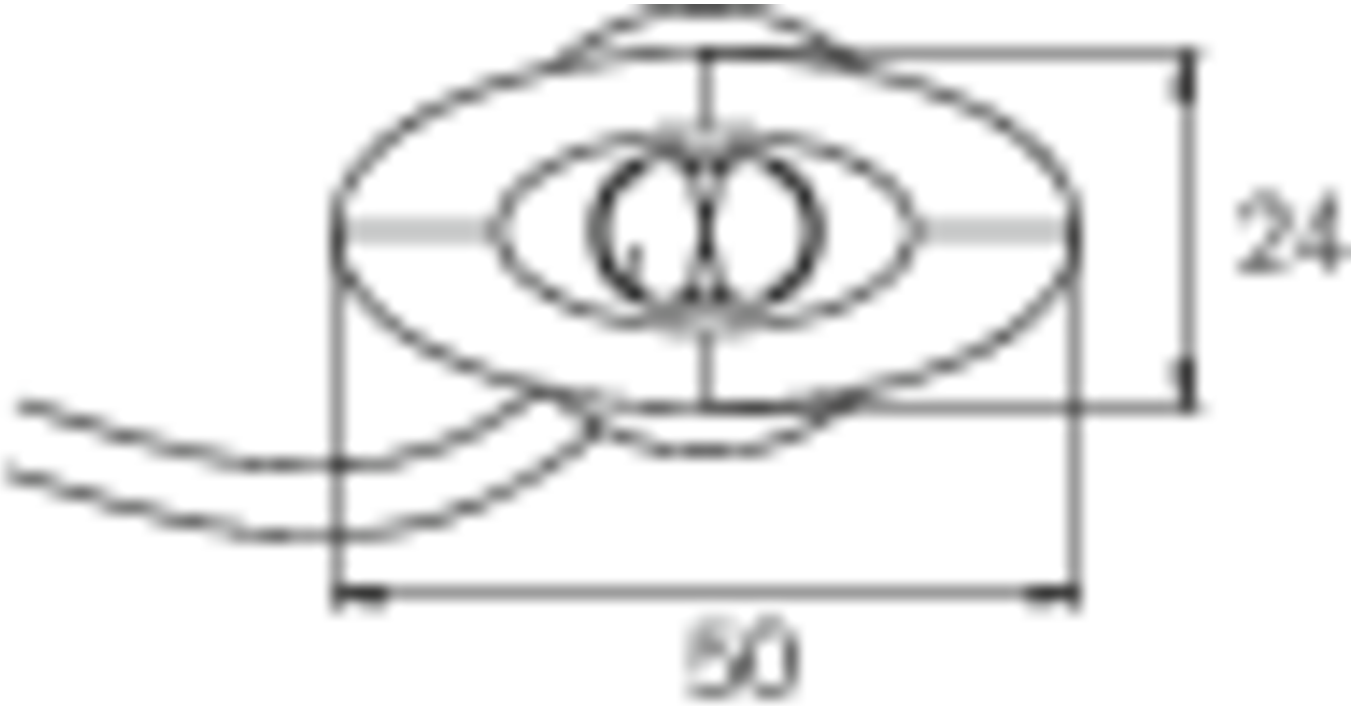

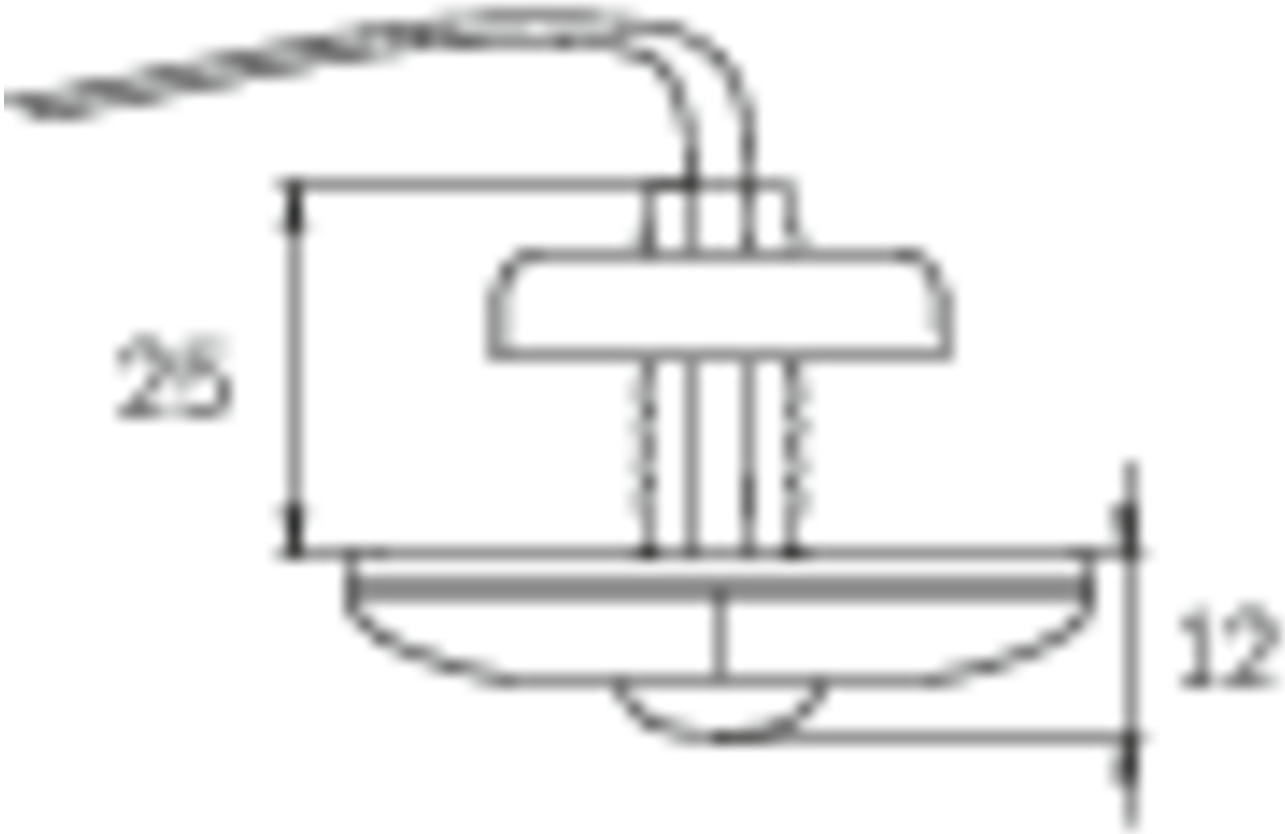

ø10,5

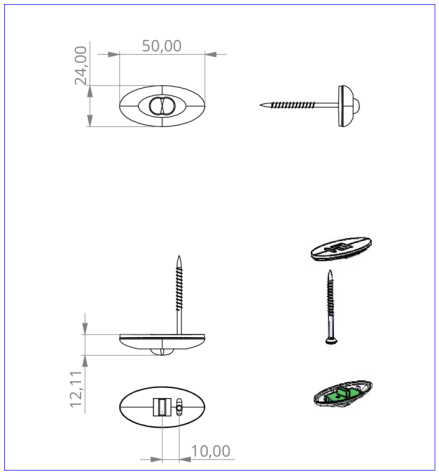

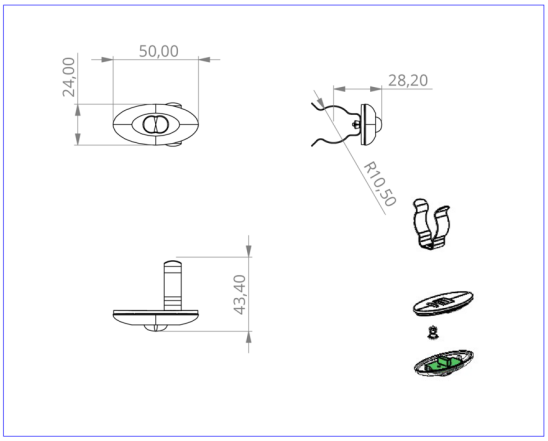

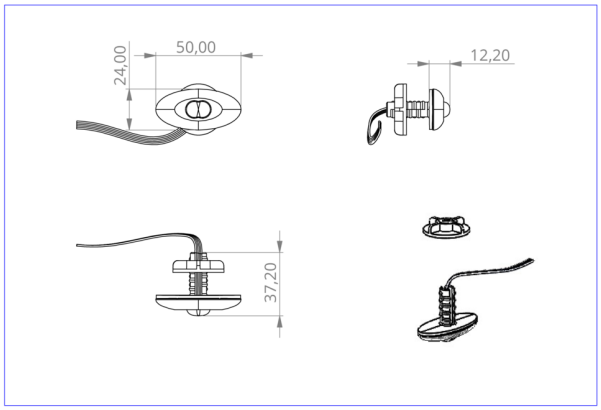

DO verschiedene Einbaumaße

RELATED PRODUCTS

Art.-No.	Image	Monitoring	Supply	Color	Investment	Automatic log	Maintenance level	Remote maintenance	max. luminaires	Single luminaire monitoring
DOS029		Without monitoring		Transparent						

As of: 16.09.2026 - Subject to technical changes and errors.