RP GROUP
SOLUTIONS IN SAFETY + LIGHTING

Art.-Nr: WGD019
Exit sign Centralised power supply systems Surface mounting, Without monitoring, CPS, 46 m, IP20, Metal, White, printed pictograms

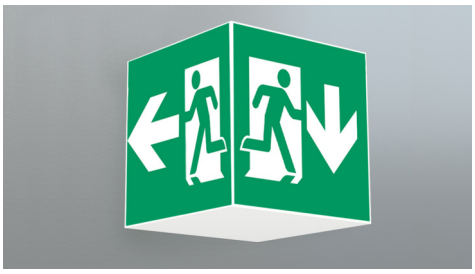

Square emergency exit sign cube luminaire for identifying escape and emergency routes. It can be mounted straight onto the ceiling or suspended using the appropriate accessories.

The cube shape means that this plastic luminaire is easily recognisable from four sides. Ideal for use where routes intersect, e.g. in large stores with aisles.

Planning certainty is provided by printed pictograms, determined on the basis of logic. The pictograms used correspond to DIN ISO 7010 (arrow to the right, left and down).

CE

More information
www.rp-group.com/en/item/WGD019

TECHNICAL DATA

Luminaire type	Exit sign
Mounting	Surface mounting
Recognition distance	46 m
Pictograph	Set
Illuminant	LED
Housing material	Metal
Housing color	White
Protection type (IP)	IP20
Impact resistance (IK)	≥ 3
Certification	Waste disposal, CE
Insulation class	1
Supply	Centralised power supply systems
Monitoring	Without monitoring
Bridging time	CPS
Battery	/
Operating mode	Permanent circuit
Input voltage AC	230 V
Input frequency	50 / 60 Hz

Input voltage DC	100-254 V
Power max.	4,5 W
Power maintained	4,5 W
Power non-maintained	0 W
Ambient temperature maintained mode	-25 °C to 40 °C
Ambient temperature non-maintained mode	-25 °C to 40 °C
Depth	237 mm
Width	237 mm
Height	237 mm
Weight	1.16
Weight incl. packaging	1.3
Connection cross-section	1.5 mm²
Switching input	No
Emergency light blocking	No
Battery connection	No
Dimming function	No
Luminous flux mains	250 lm
Luminous flux emergency	250 lm
Customs tariff number	94056120
GTIN	4260123684129

RP GROUP
SOLUTIONS IN SAFETY + LIGHTING

TECHNICAL DRAWING

RP GROUP
SOLUTIONS IN SAFETY + LIGHTING

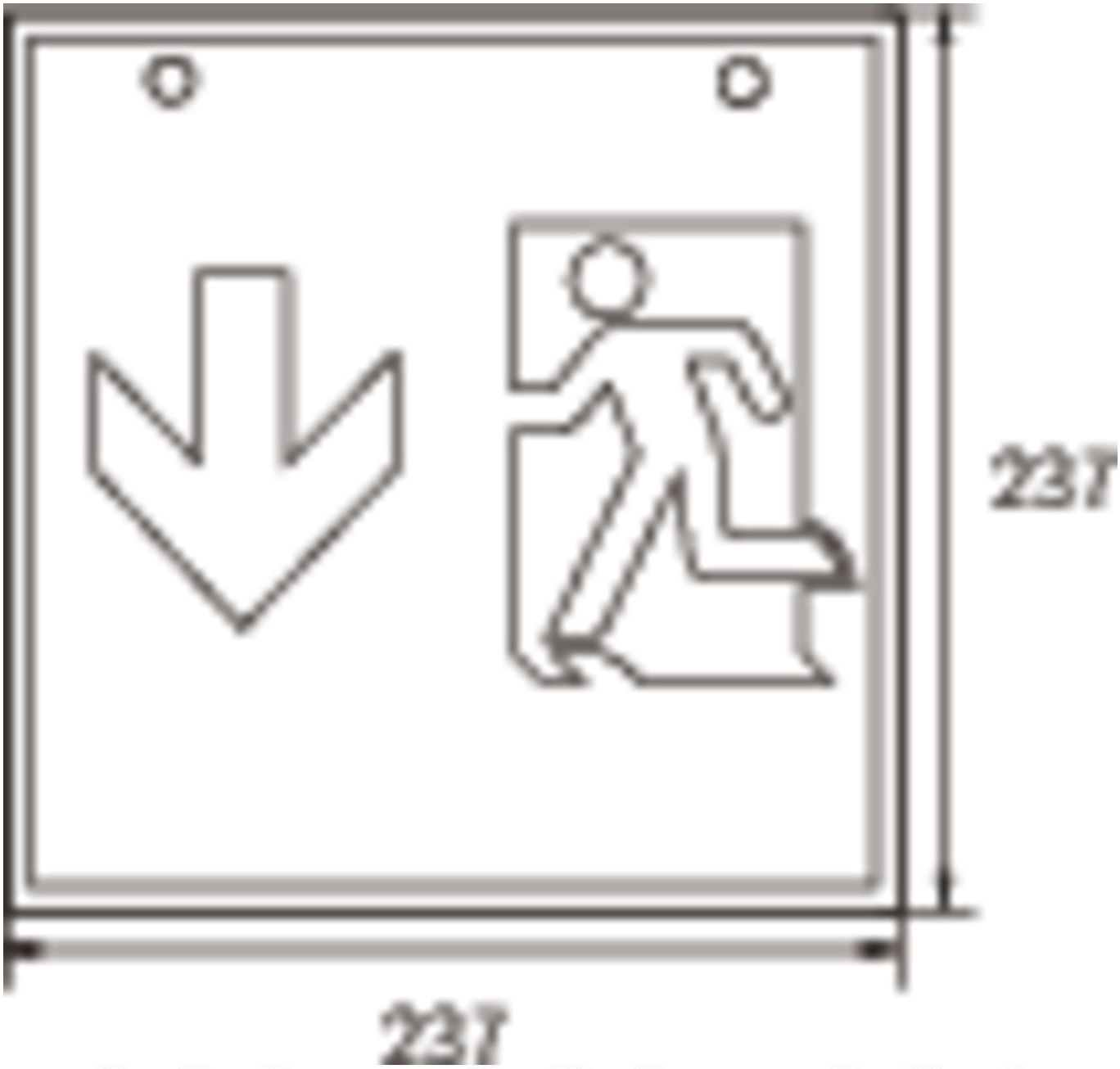

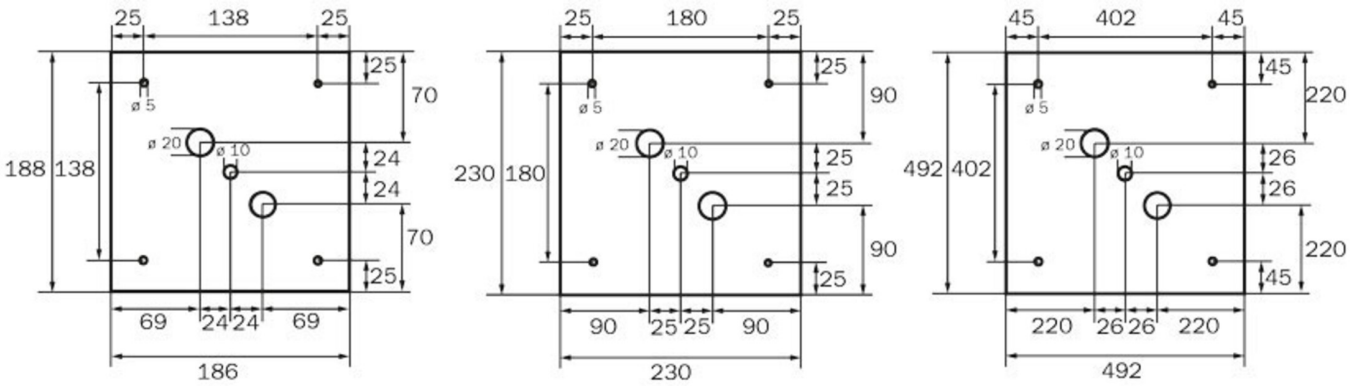

RP GROUP
SOLUTIONS IN SAFETY + LIGHTING

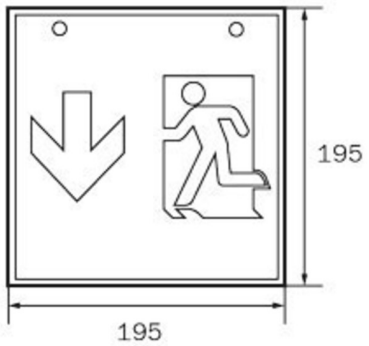

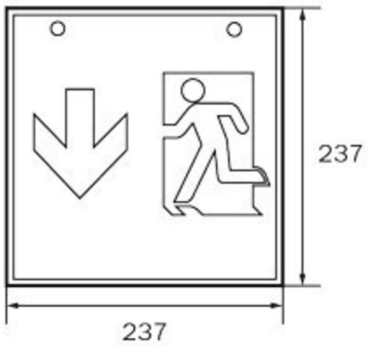

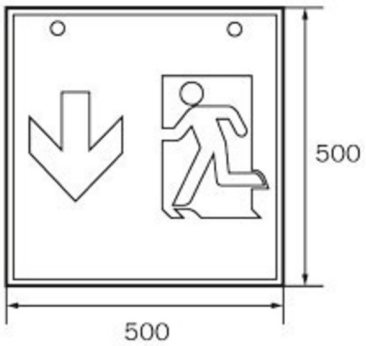

WG WK WX

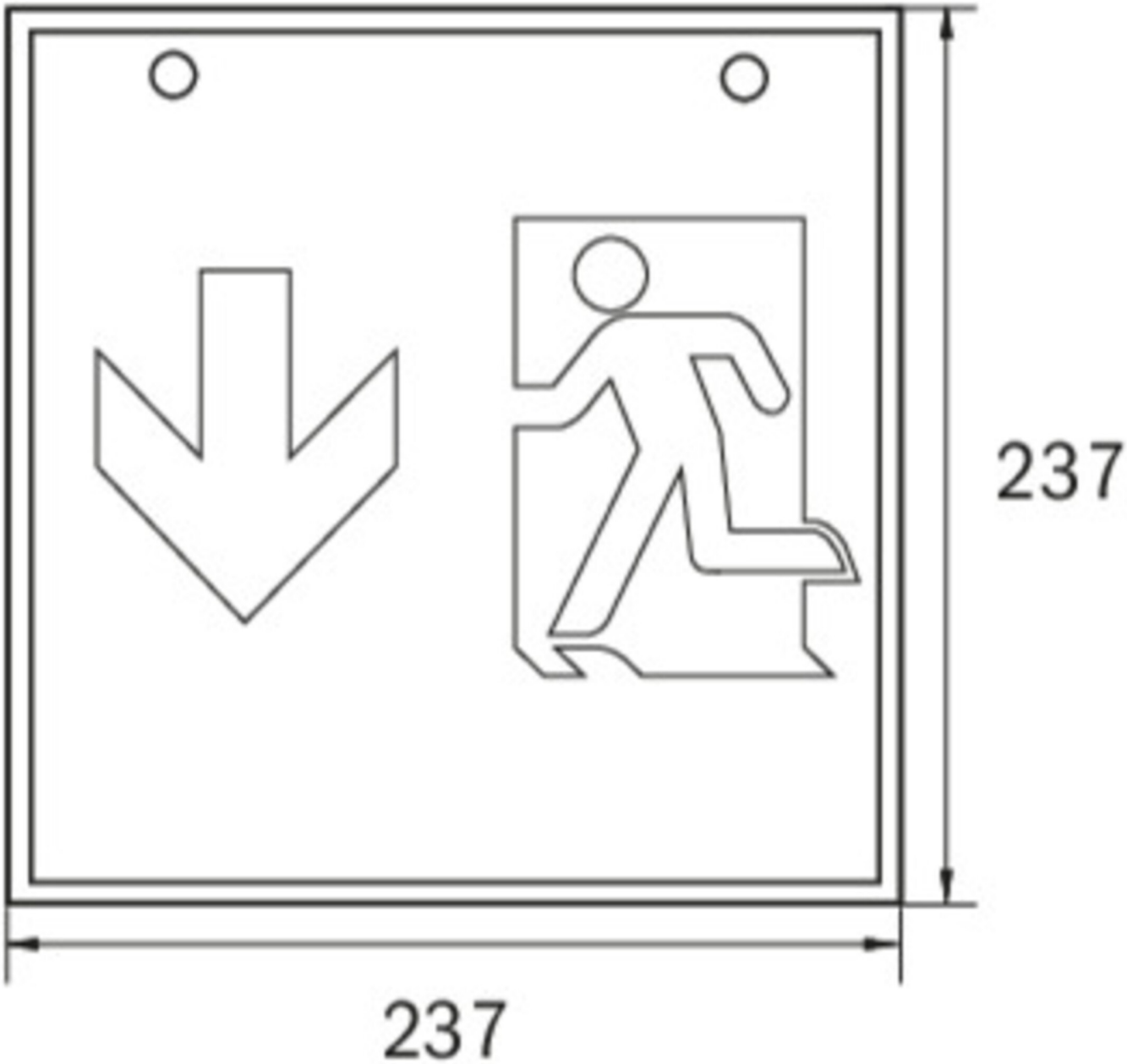

ACCESSORY LIST

WKO - Set of chain eyelets for cube mounting (4 pieces)

1PV-EB - Pendulum

DSA-Y4M-APA - Wire suspension

DSA-Y4M - Wire suspension

As of: 16.09.2026 - Subject to technical changes and errors.