RP GROUP
SOLUTIONS IN SAFETY + LIGHTING

Art.-Nr: DOS023WL
Emergency light Self-contained Universal, Wireless Professional (WL), 3 h, IP20, Polycarbonate, Transparent

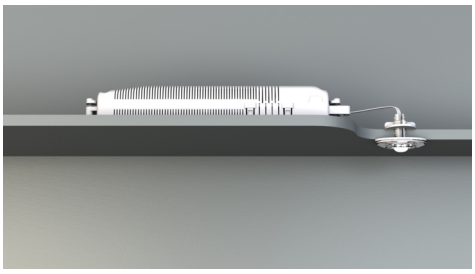

Small LED safety luminaire, for recessed and surface mounting, with great effect. The small dimensions and transparent housing material make completely unobtrusive mounting possible.

This variant is intended for installation in existing luminaire housings. The mounting plate/clips, as well as the emergency light technology, are supplied.

Wireless central control and monitoring for large installations of up to 50,000 luminaires with Wireless Professional.

CE

More information
www.rp-group.com/en/item/DOS023WL

TECHNICAL DATA

Luminaire type	Emergency light
Mounting	Universal
Pictograph	No
Illuminant	LED
Housing material	Polycarbonate
Housing color	Transparent
Protection type (IP)	IP20
Impact resistance (IK)	≥ 3
Certification	Waste disposal, CE
Insulation class	2
Supply	Self-contained
Monitoring	Wireless Professional (WL)
Bridging time	3 h
Battery	NIMH 4,8 V/2,0 Ah
Operating mode	Non-maintained / maintained
Input voltage AC	230 V
Input frequency	50 / 60 Hz
Input voltage DC	- V
Power max.	5,6 W

Power maintained	5,2 W
Power non-maintained	3,8 W
Ambient temperature maintained mode	-5 °C to 40 °C
Ambient temperature non-maintained mode	-5 °C to 40 °C
Depth	24 mm
Width	50 mm
Height	12 mm
Installation dimensions Diameter	10.5 mm
Weight	0.28
Weight incl. packaging	0.36
Connection cross-section	1.5 mm²
Switching input	Yes
Emergency light blocking	Yes
Battery connection	Clip
Dimming function	No
Luminous flux mains	140 lm
Luminous flux emergency	140 lm
Customs tariff number	94056120
GTIN	4260123689902

RP GROUP
SOLUTIONS IN SAFETY + LIGHTING

TECHNICAL DRAWING

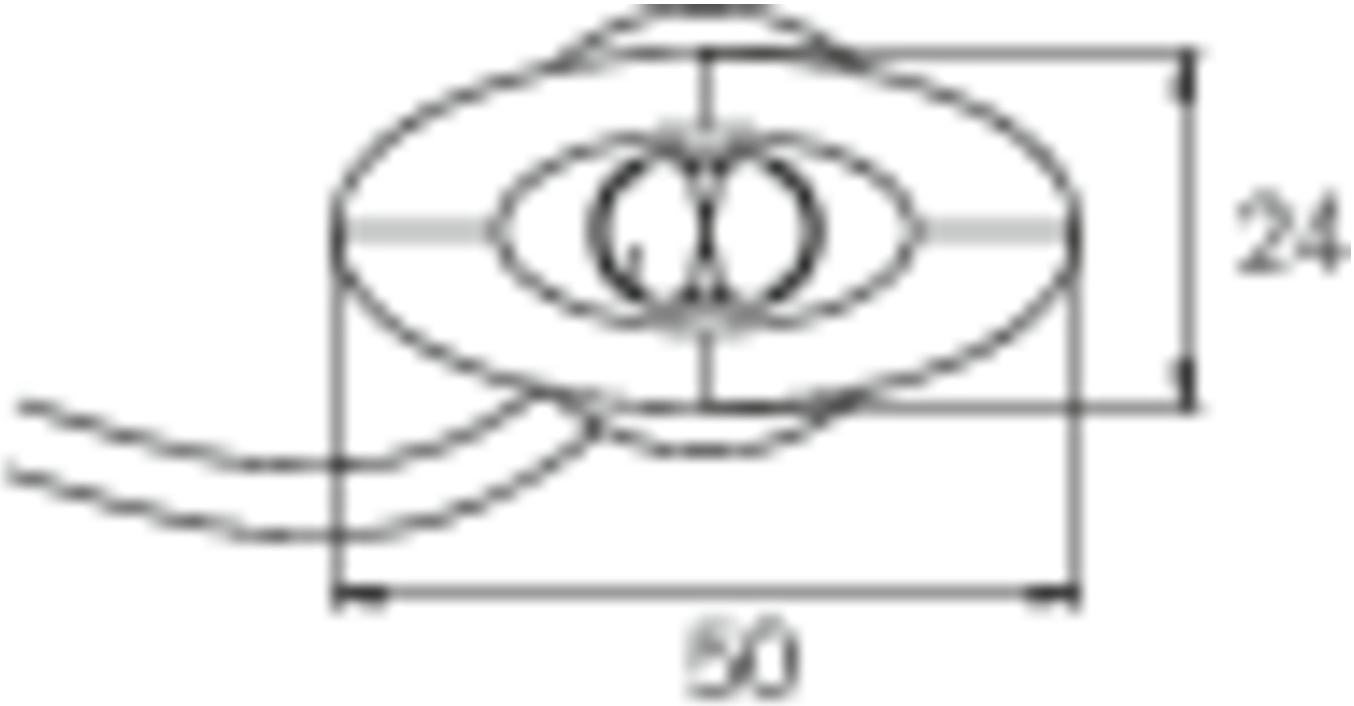

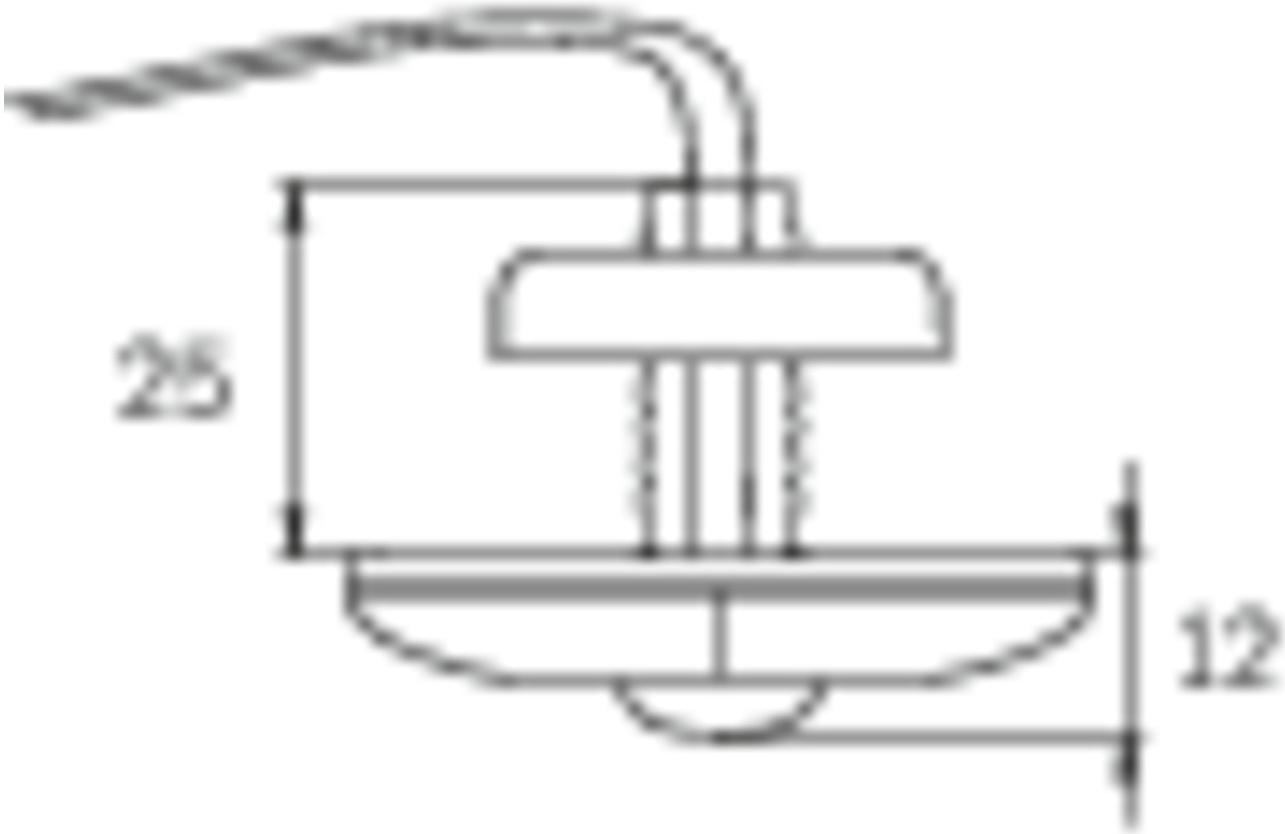

ø10,5

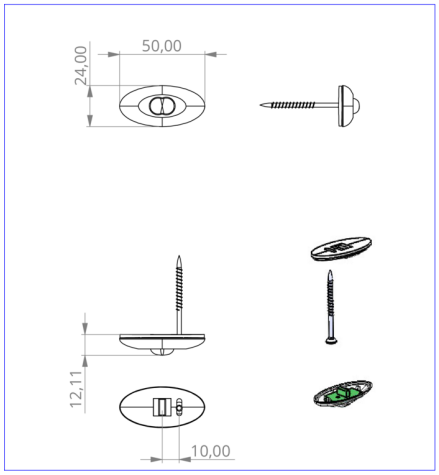

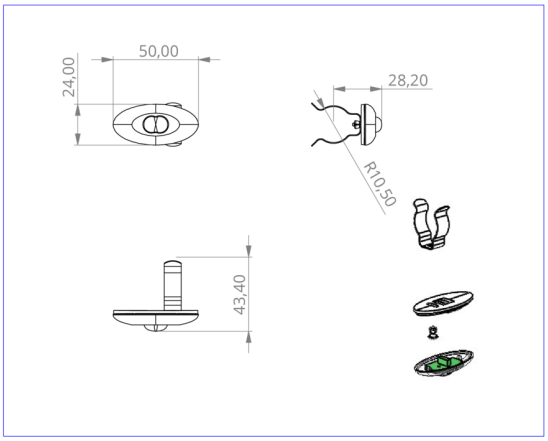

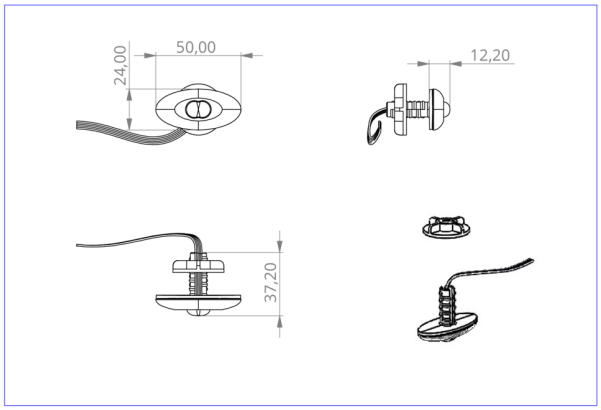

DO verschiedene Einbaumaße

ACCESSORY LIST

NIMHHT4820Q - Battery

RELATED PRODUCTS

Art.-No.	Image	Monitoring	Supply	Color	Investment	Automatic log	Maintenance level	Remote maintenance	max. luminaires	Single luminaire monitoring
DOS023		ECB		Transparent						
DOS023SC		SelfControl (SC)	Single battery	Transparent	€	no	high	no	unlimited	itself

As of: 16.09.2026 - Subject to technical changes and errors.