RP GROUP
SOLUTIONS IN SAFETY + LIGHTING

## Art.-Nr: WEF029ML
## Emergency light Centralised power supply systems Recessed wall mounting, Central power supply (ML), CPS, IP20, Zinc die-cast, White

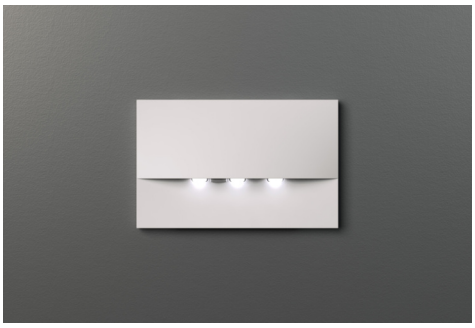

High-grade zinc die-cast safety luminaire for recessed mounting in the wall. This is intended for mounting in conventional double switch boxes where the mounting frame can be aligned to the box. The zinc die-cast ornamental cover is locked using a fastener that cannot be seen from the outside.

The radiating characteristics run parallel to the wall to help perfectly illuminate escape and emergency routes.

Control and monitoring via central power supply system.

CE

More information
www.rp-group.com/en/item/WEF029ML

## TECHNICAL DATA

| | |
|---|---|
| Luminaire type | Emergency light |
| Mounting | Recessed wall mounting |
| Pictograph | No |
| Illuminant | LED |
| Housing material | Zinc die-cast |
| Housing color | White |
| Protection type (IP) | IP20 |
| Impact resistance (IK) | 7 |
| Certification | Waste disposal, CE |
| Insulation class | 2 |
| Supply | Centralised power supply systems |
| Monitoring | Central power supply (ML) |
| Bridging time | CPS |
| Battery | / |
| Operating mode | single luminaire switching |
| Input voltage AC | 230 V |
| Input frequency | 50 / 60 Hz |
| Input voltage DC | 216 V |
| Power max. | 4,3 W |

| | |
|---|---|
| Power maintained | 4,3 W |
| Power non-maintained | 0,7 W |
| Ambient temperature maintained mode | -35 °C to 40 °C |
| Ambient temperature non-maintained mode | -35 °C to 40 °C |
| Depth | 166 mm |
| Width | 21 mm |
| Height | 106 mm |
| Installation length | 155 mm |
| Installation width | 82 mm |
| Installation height | 70 mm |
| Weight | 0.45 |
| Weight incl. packaging | 0.48 |
| Connection cross-section | 2.5 mm² |
| Switching input | No |
| Emergency light blocking | No |
| Battery connection | No |
| Dimming function | No |
| Luminous flux mains | 420 lm |
| Luminous flux emergency | 420 lm |
| Customs tariff number | 94056180 |
| GTIN | 4260349829915 |

RP GROUP
SOLUTIONS IN SAFETY + LIGHTING

## TECHNICAL DRAWING

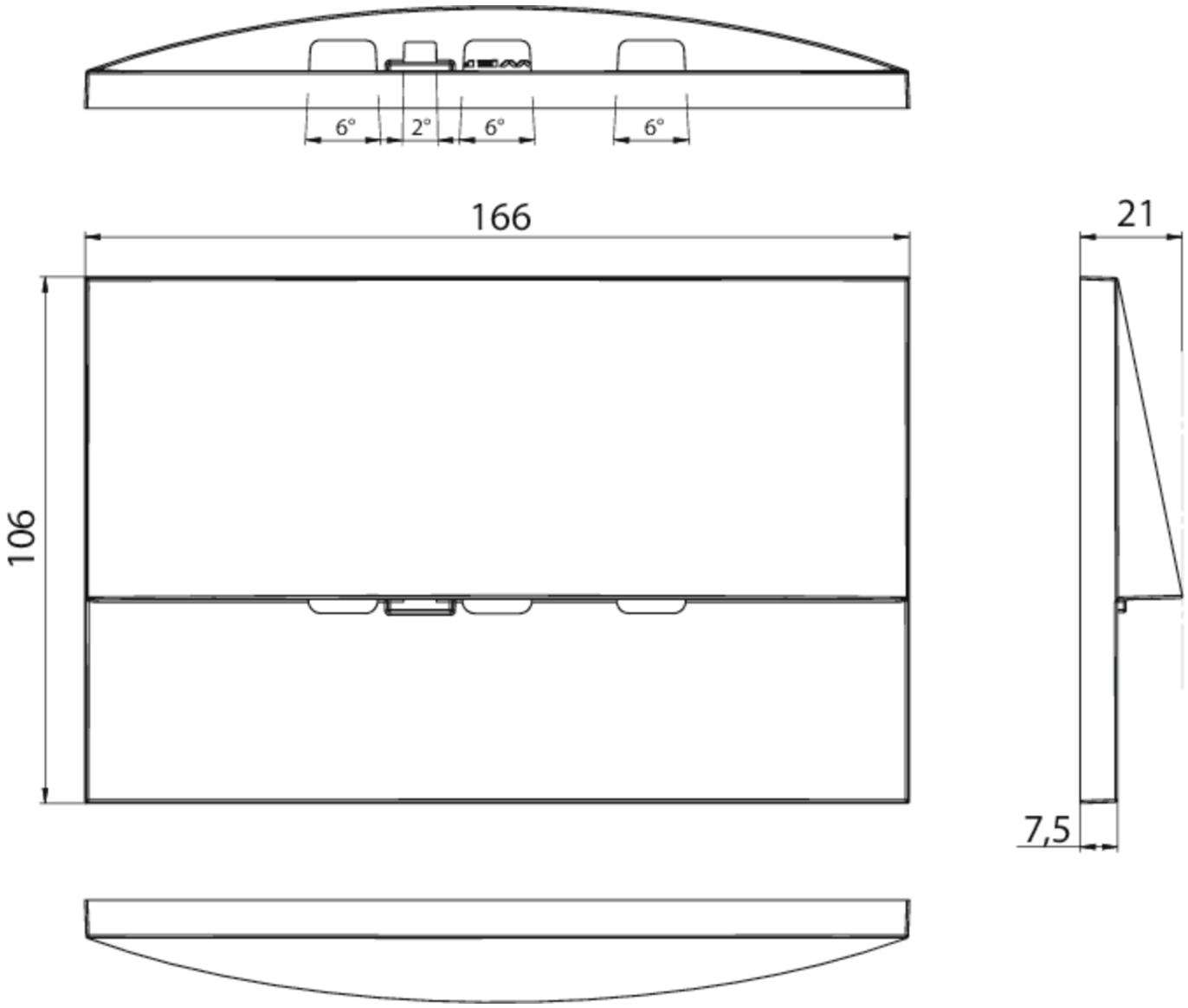
6°
2°
6°
6°
166
21
106
7,5

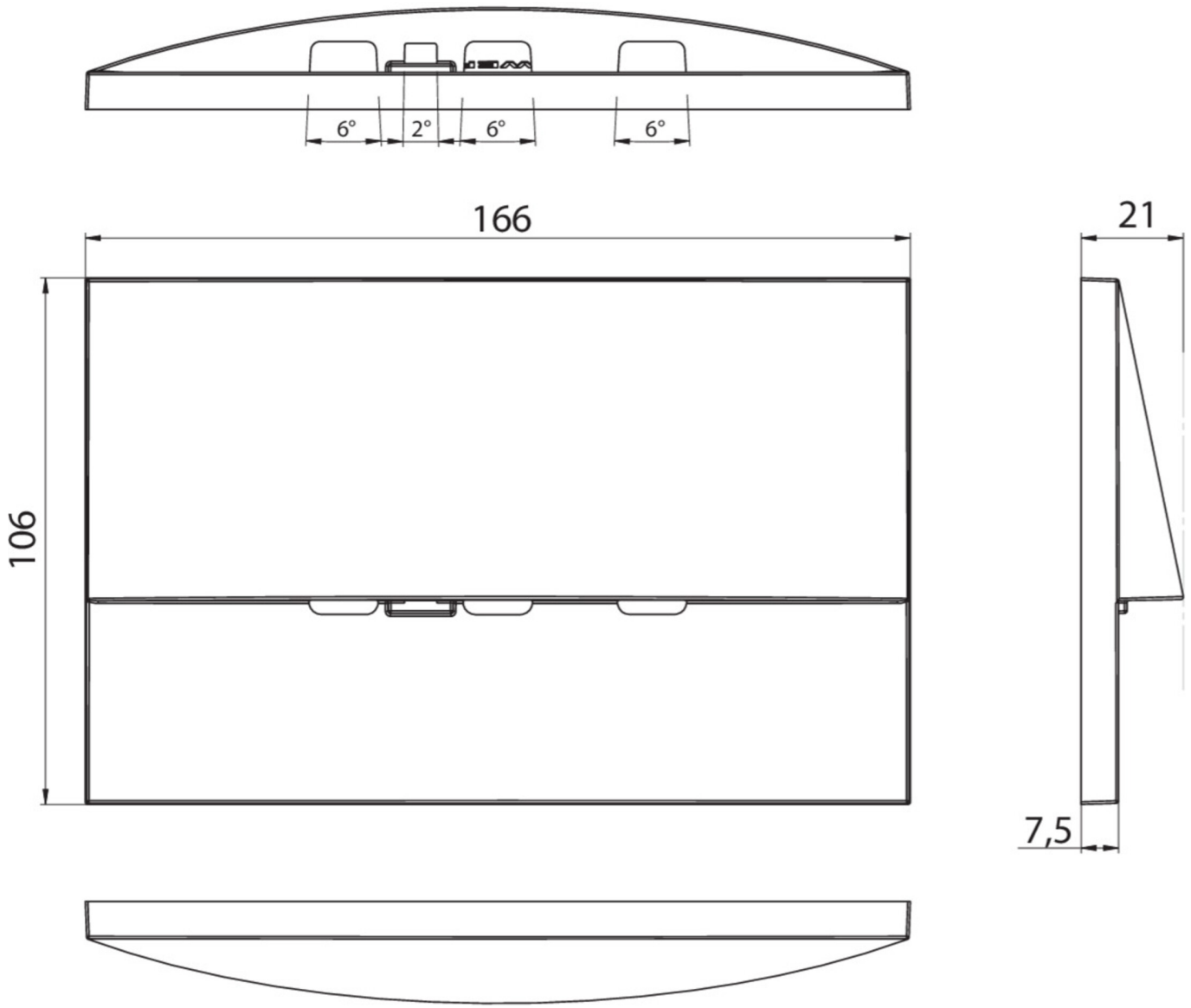


As of: 16.09.2026 - Subject to technical changes and errors.