RP GROUP
SOLUTIONS IN SAFETY + LIGHTING

Art.-Nr: WER029ML-E
Emergency light Centralised power supply systems Recessed wall mounting, Central power supply (ML), CPS, IP20, Zinc die-cast, Stainless steel

High-grade and discreet zinc die-cast safety luminaire for recessed mounting in the wall.

This is intended for mounting in conventional switch boxes where the mounting frame can be aligned to the box. The zinc die-cast ornamental cover is locked using a fastener that cannot be seen from the outside.

Control and monitoring via central power supply system.

CE

More information
www.rp-group.com/en/item/WER029ML-E

TECHNICAL DATA

Luminaire type	Emergency light
Mounting	Recessed wall mounting
Pictograph	No
Illuminant	LED
Housing material	Zinc die-cast
Housing color	Stainless steel
Protection type (IP)	IP20
Impact resistance (IK)	≥ 3
Certification	Waste disposal, CE
Insulation class	2
Supply	Centralised power supply systems
Monitoring	Central power supply (ML)
Bridging time	CPS
Battery	/
Operating mode	single luminaire switching
Input voltage AC	230 V
Input frequency	50 / 60 Hz

Input voltage DC	216 V
Power max.	2,1 W
Power maintained	2,1 W
Power non-maintained	0,7 W
Ambient temperature maintained mode	-20 °C to 40 °C
Ambient temperature non-maintained mode	-20 °C to 40 °C
Depth	20 mm
Width	90 mm
Height	90 mm
Installation dimensions Diameter	68 mm
Weight	0.3
Weight incl. packaging	0.33
Connection cross-section	2.5 mm²
Switching input	No
Emergency light blocking	No
Battery connection	No
Dimming function	No
Luminous flux mains	140 lm
Luminous flux emergency	140 lm
Customs tariff number	94056180
GTIN	4260682147332

RP GROUP
SOLUTIONS IN SAFETY + LIGHTING

TECHNICAL DRAWING

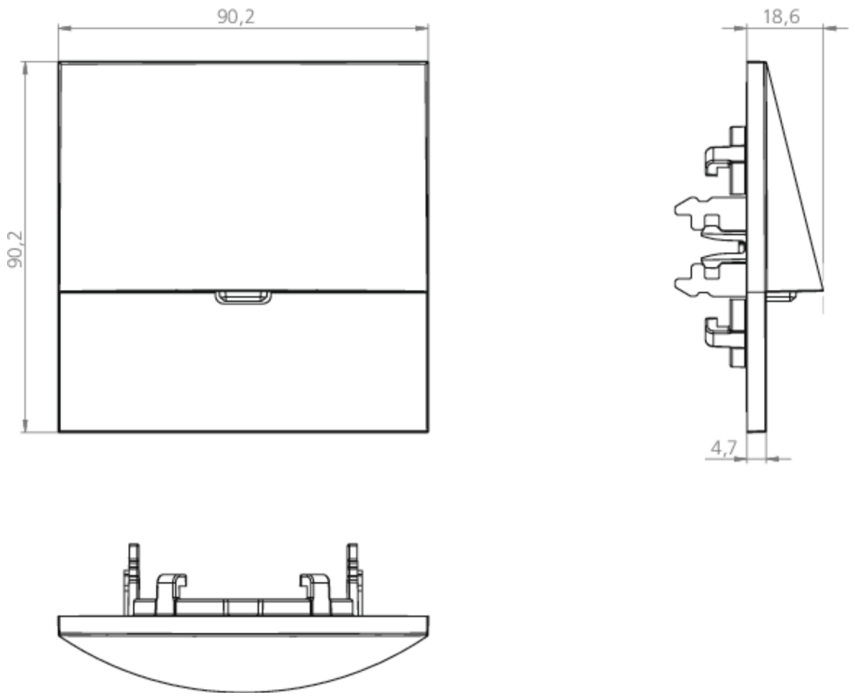

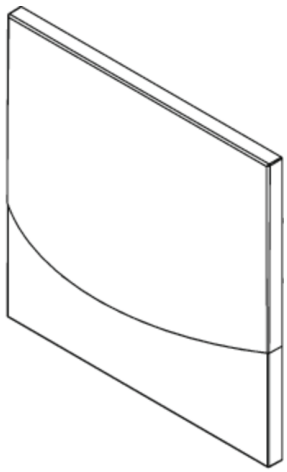

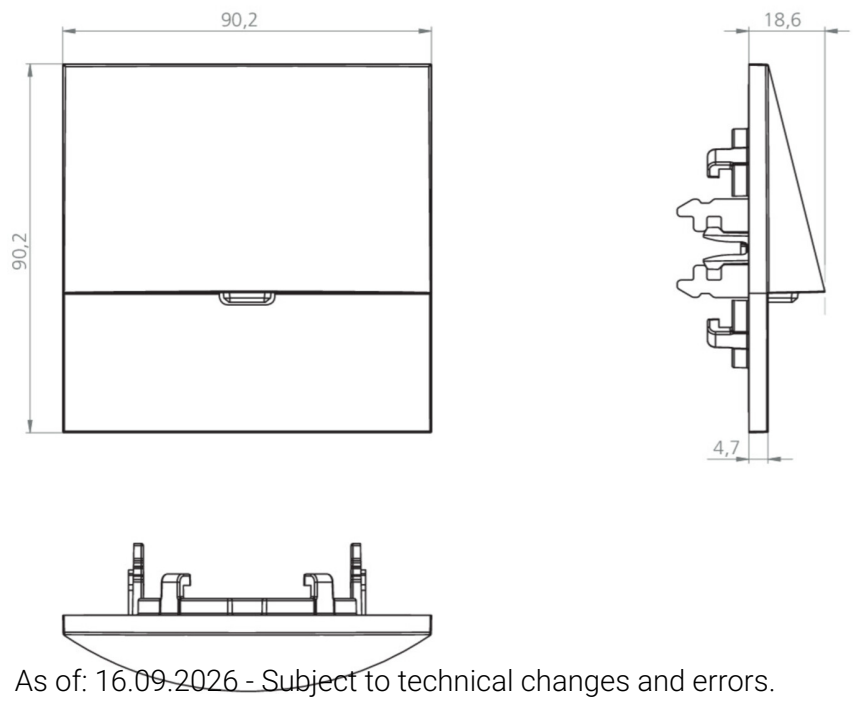

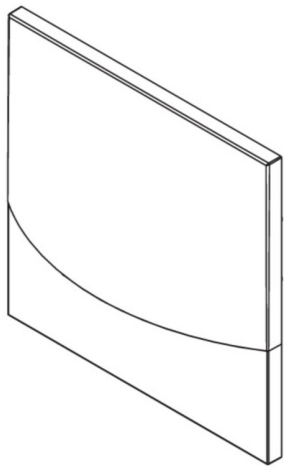

As of: 16.09.2026 - Subject to technical changes and errors.