RP GROUP
SOLUTIONS IN SAFETY + LIGHTING

Art.-Nr: EERL029ML-AZ
Emergency light Centralised power supply systems Ceiling mounting, Central power supply (ML), CPS, IP20, Zinc die-cast, Anthracite, Flexiklick round & corridor

High-grade zinc-aluminium safety luminaire for fitting in the ceiling.

The compact design permits mounting in a 68mm opening in the ceiling. Alongside the usual recessed ceiling mounting, it can also be mounted in conventional and fire protection sockets. It is secured with ease using tension springs or a screw connection on the box.

Control and monitoring via central power supply system. The innovative integrated lens holder with a rapid fitting fixture permits the flexible use of various lens types. Using the right lens allows the distribution of light to be matched perfectly to the application and simplifies illumination which satisfies all relevant standards. A round lens and corridor lens are supplied with every luminaire, allowing it to be adapted perfectly to the respective mounting situation. Other lenses, such as a spotlight lens, beam lens or H lens, are available as options.

CE

More information
www.rp-group.com/en/item/EERL029ML-AZ

TECHNICAL DATA

Luminaire type	Emergency light
Mounting	Ceiling mounting
Pictograph	No
Illuminant	LED
Housing material	Zinc die-cast
Housing color	Anthracite
Protection type (IP)	IP20
Impact resistance (IK)	≥ 3
Certification	Waste disposal, CE
Insulation class	2
Supply	Centralised power supply systems
Monitoring	Central power supply (ML)
Bridging time	CPS
Battery	/
Operating mode	single luminaire switching

Input voltage AC	230 V
Input frequency	50 / 60 Hz
Input voltage DC	216 V
Power max.	2,1 W
Power maintained	2,1 W
Power non-maintained	0,7 W
Ambient temperature maintained mode	-20 °C to 40 °C
Ambient temperature non-maintained mode	-20 °C to 40 °C
Height	4 mm
Diameter	88 mm
Installation dimensions Diameter	68 mm
Weight	0.26
Weight incl. packaging	0.39
Connection cross-section	2.5 mm²
Switching input	No
Emergency light blocking	No
Battery connection	No
Dimming function	No
Luminous flux mains	140 lm
Luminous flux emergency	140 lm
Customs tariff number	94056180
GTIN	4260682151292

TECHNICAL DRAWING

Maße EER / EEQ

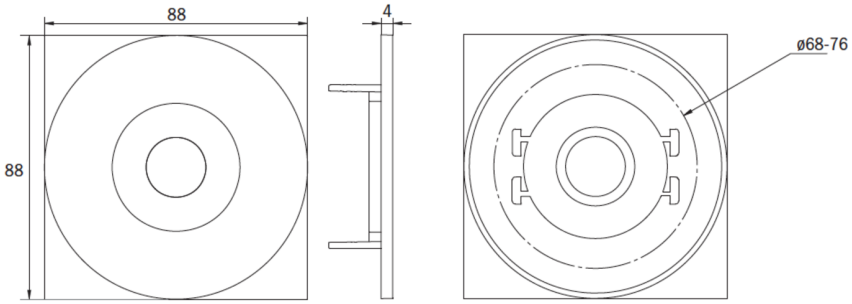

Einzelbatterie-Elektronik-Box (UH-1)

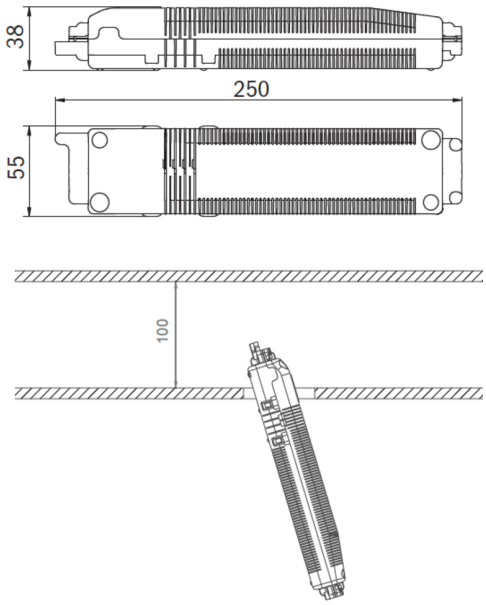

Lochausschnitt EER / EEQ

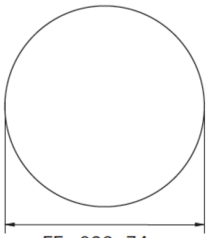

EExx023: 74mm
EExx029: 68mm

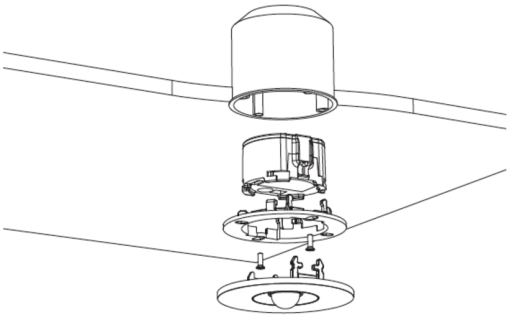

EExx029: Schalterdose notwendig (nicht im Lieferumfang enthalten)

RP GROUP
SOLUTIONS IN SAFETY + LIGHTING

RELATED PRODUCTS

Art.-No.	Image	Monitoring	Supply	Color	Investment	Automatic log	Maintenance level	Remote maintenance	max. luminaires	Single luminaire monitoring
EERL029ML		Central power supply (ML)	Central power supply	RAL 9003	€€€	Yes	low	Yes	1,920 per system	central
EERL029ML-AZ-DOSE		Central power supply (ML)	Central power supply	RAL 7016	€€€	Yes	low	Yes	1,920 per system	central
EERL029ML-DOSE		Central power supply (ML)	Central power supply	RAL 9003	€€€	Yes	low	Yes	1,920 per system	central
EERL029ML-E	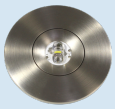	Central power supply (ML)	Central power supply	Edelstahl	€€€	Yes	low	Yes	1,920 per system	central
EERL029ML-E-DOSE	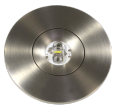	Central power supply (ML)	Central power supply	Edelstahl	€€€	Yes	low	Yes	1,920 per system	central
EERL529CC		CoreCompact 24 (CC)	Central power supply	RAL 9003	€€	Yes	low	Yes		central
EERL529CC-AZ		CoreCompact 24 (CC)	Central power supply	RAL 7016	€€	Yes	low	Yes		central
EERL529CC-E	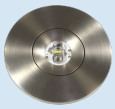	CoreCompact 24 (CC)	Central power supply	Edelstahl	€€	Yes	low	Yes		central

As of: 16.09.2026 - Subject to technical changes and errors.