RP GROUP
SOLUTIONS IN SAFETY + LIGHTING

Art.-Nr: AXDP509CC-AZ
Exit sign Centralised power supply systems Pendulum ceiling construction, CoreCompact 24 (CC), CPS, 30 m, IP40, Zinc die-cast, Anthracite, Set of pictograms

Modern zinc die-cast emergency exit sign luminaire with pendant for surface mounting on the ceiling. Escape and emergency routes can be identified on either one or two sides.

It is part of the A series luminaire family, which provides solutions for any mounting and has won the German Design Award for its uniform, straight-line design.

Control and monitoring via central 24 V low-power system. Planning certainty is provided by tool-free, variable use of the pictograms on site. A set of pictograms corresponding to DIN ISO 7010 (arrow to the right, left, up and down) is supplied as standard.

CE

More information
www.rp-group.com/en/item/AXDP509CC-AZ

TECHNICAL DATA

Luminaire type	Exit sign
Mounting	Pendulum ceiling construction
Recognition distance	30 m
Pictograph	Set
Illuminant	LED
Housing material	Zinc die-cast
Housing color	Anthracite
Protection type (IP)	IP40
Impact resistance (IK)	≥ 3
Certification	Waste disposal, CE
Insulation class	2
Supply	Centralised power supply systems
Monitoring	CoreCompact 24 (CC)
Bridging time	CPS
Battery	/
Operating mode	Non-maintained / maintained
Input voltage AC	24 V

Power max.	3,4 W
Power maintained	3,4 W
Power non-maintained	0,4 W
Ambient temperature maintained mode	-5 °C to 40 °C
Ambient temperature non-maintained mode	-5 °C to 40 °C
Depth	80 mm
Width	312 mm
Height	228 mm
Weight	1.91
Weight incl. packaging	2.4
Connection cross-section	2.5 mm²
Switching input	No
Emergency light blocking	No
Battery connection	No
Luminous flux mains	230 lm
Luminous flux emergency	230 lm
Customs tariff number	94056180
GTIN	4260682156761

TECHNICAL DRAWING

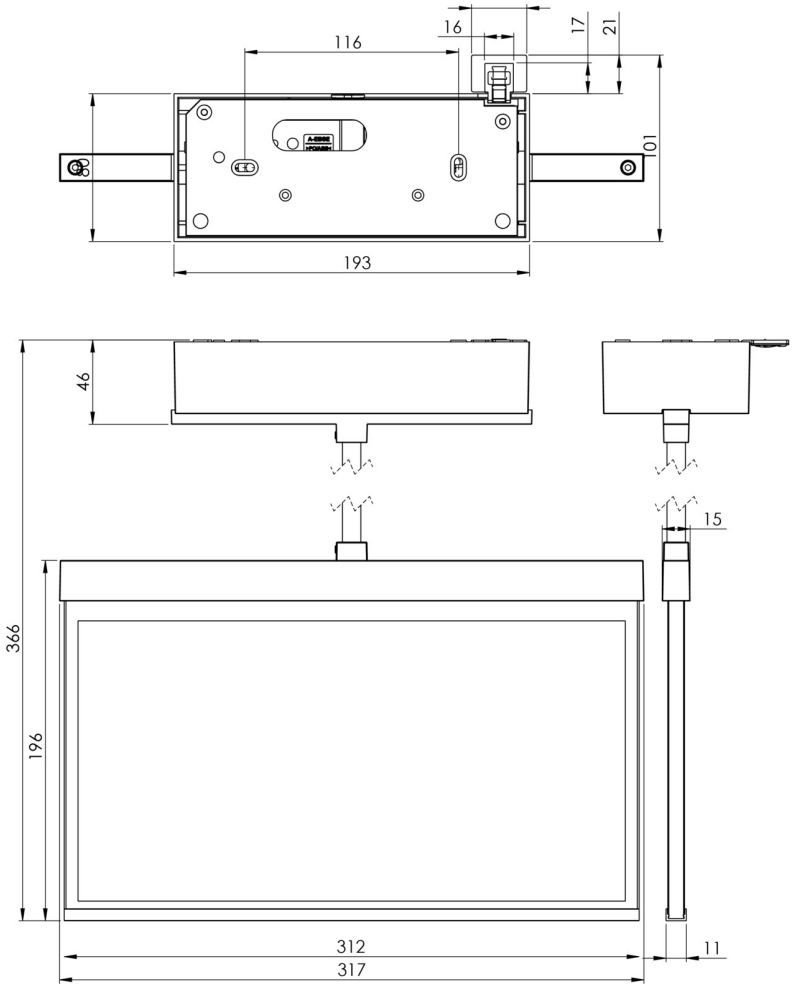

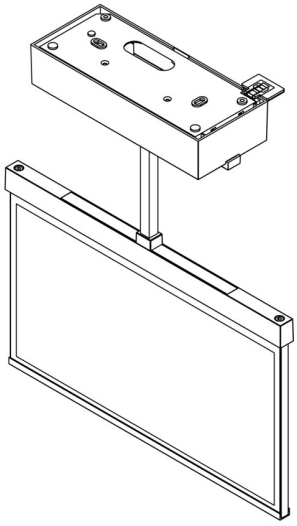

ACCESSORY LIST

AM-X-APA - Surface-mounted/intermediate housing

AM-X-PKG - Precision ball joint for square pendulums – tilt compensation up to 23°

RP GROUP
SOLUTIONS IN SAFETY + LIGHTING

RELATED PRODUCTS

Art.-No.	Image	Monitoring	Supply	Color	Investment	Automatic log	Maintenance level	Remote maintenance	max. luminaires	Single luminaire monitoring
AXDP009ML		Central power supply (ML)	Central power supply	RAL 9003	€€€	Yes	low	Yes	1,920 per system	central
AXDP009ML-AZ		Central power supply (ML)	Central power supply	RAL 7016	€€€	Yes	low	Yes	1,920 per system	central
AXDP009ML-E		Central power supply (ML)	Central power supply	Edelstahl	€€€	Yes	low	Yes	1,920 per system	central
AXDP509CC		CoreCompact 24 (CC)	Central power supply	RAL 9003	€€	Yes	low	Yes		central
AXDP509CC-E		CoreCompact 24 (CC)	Central power supply	Edelstahl	€€	Yes	low	Yes		central

As of: 16.09.2026 - Subject to technical changes and errors.