RP GROUP
SOLUTIONS IN SAFETY + LIGHTING

Art.-Nr: WEF529CC
Emergency light Centralised power supply systems Recessed wall mounting, CoreCompact 24 (CC), CPS, IP20, Zinc die-cast, White

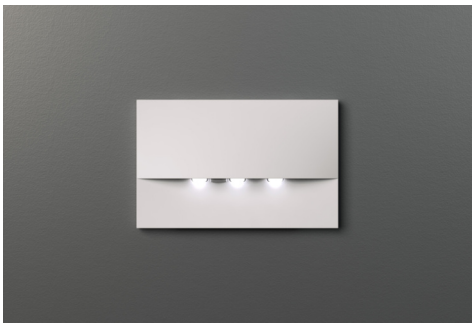

High-grade zinc die-cast safety luminaire for recessed mounting in the wall. This is intended for mounting in conventional double switch boxes where the mounting frame can be aligned to the box. The zinc die-cast ornamental cover is locked using a fastener that cannot be seen from the outside.

The radiating characteristics run parallel to the wall to help perfectly illuminate escape and emergency routes.

Control and monitoring via central 24 V low-power system.

CE

More information
www.rp-group.com/en/item/WEF529CC

TECHNICAL DATA

Luminaire type	Emergency light
Mounting	Recessed wall mounting
Pictograph	No
Illuminant	LED
Housing material	Zinc die-cast
Housing color	White
Protection type (IP)	IP20
Impact resistance (IK)	7
Certification	Waste disposal, CE
Insulation class	3
Supply	Centralised power supply systems
Monitoring	CoreCompact 24 (CC)
Bridging time	CPS
Battery	/
Operating mode	Non-maintained / maintained
Input voltage AC	24 V
Power max.	3,3 W
Power maintained	3,3 W
Power non-maintained	0,4 W

Ambient temperature maintained mode	-5 °C to 40 °C
Ambient temperature non-maintained mode	-5 °C to 40 °C
Depth	166 mm
Width	21 mm
Height	106 mm
Installation length	155 mm
Installation width	82 mm
Installation height	70 mm
Weight	0.45
Weight incl. packaging	0.48
Connection cross-section	2.5 mm²
Switching input	No
Emergency light blocking	No
Battery connection	No
Dimming function	Yes
Luminous flux mains	420 lm
Luminous flux emergency	420 lm
Customs tariff number	94056180
GTIN	4260682157584

RP GROUP
SOLUTIONS IN SAFETY + LIGHTING

TECHNICAL DRAWING

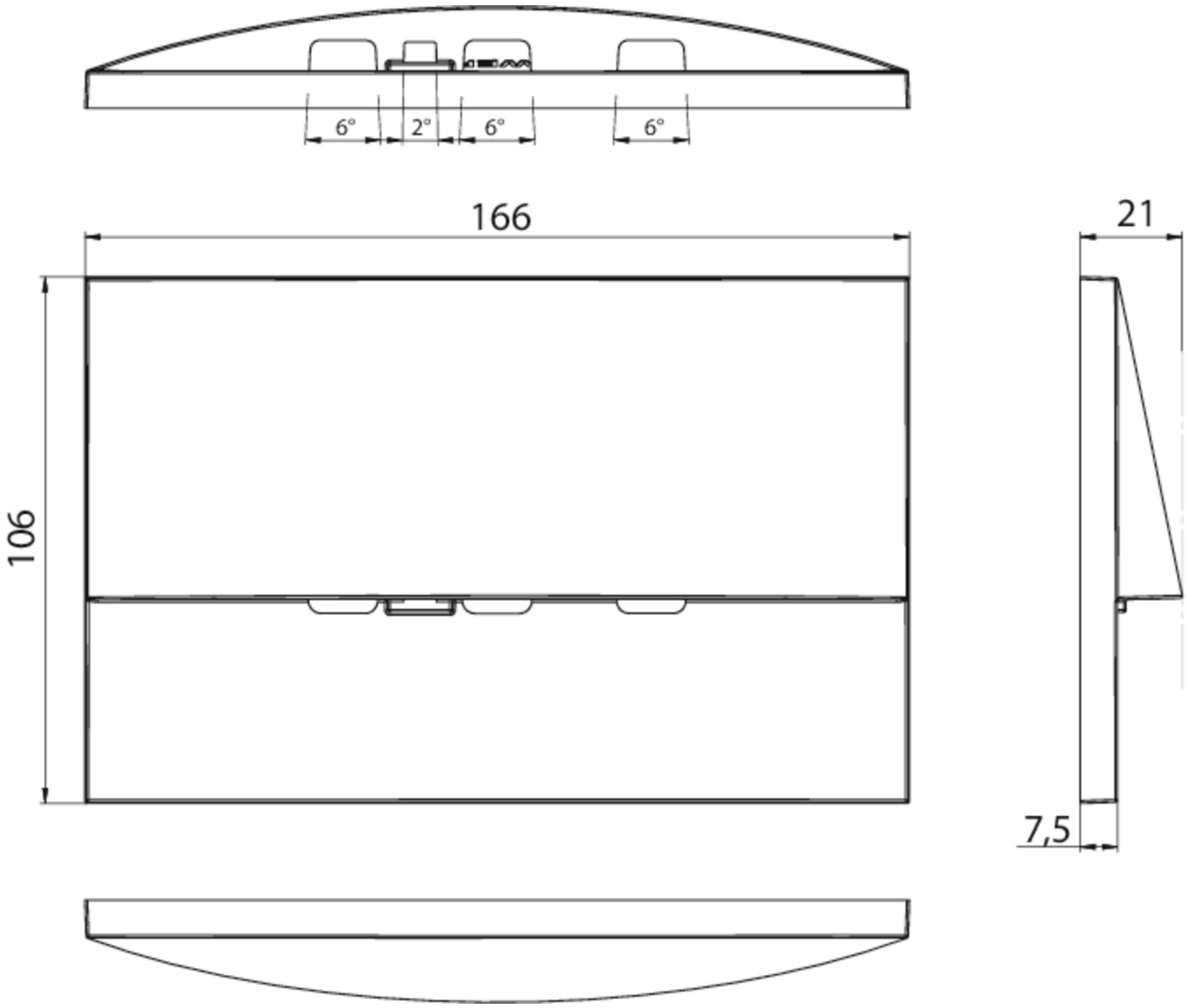
6°
2°
6°
6°
166
21
106
7,5

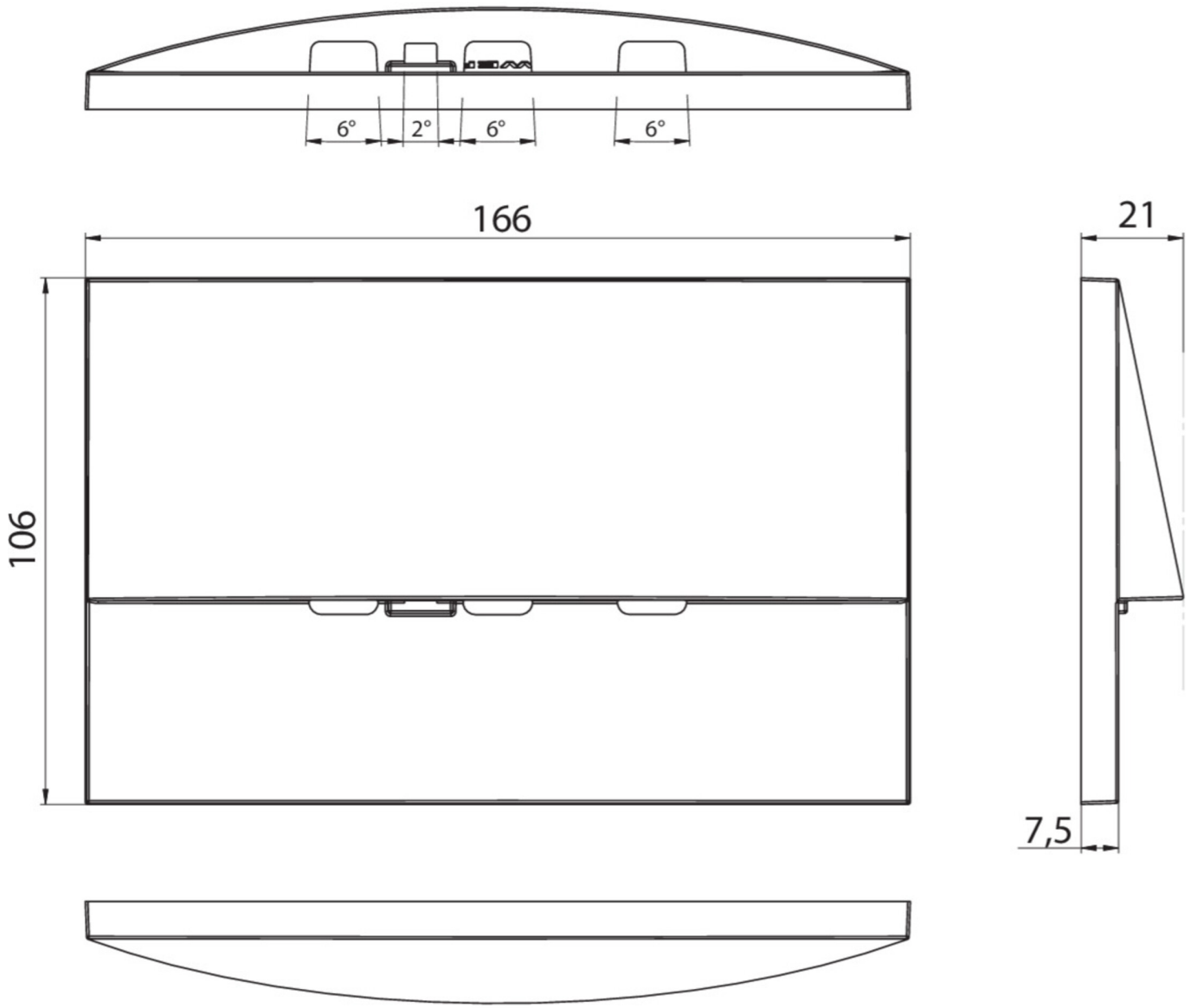

As of: 16.09.2026 - Subject to technical changes and errors.