RP GROUP
SOLUTIONS IN SAFETY + LIGHTING

Art.-Nr: EERL529CC-E
Emergency light Centralised power supply systems Ceiling mounting, CoreCompact 24 (CC), CPS, IP20, Zinc die-cast, Stainless steel, Flexiklick round & corridor

High-grade zinc-aluminium safety luminaire for fitting in the ceiling.

The compact design permits mounting in a 68mm opening in the ceiling. Alongside the usual recessed ceiling mounting, it can also be mounted in conventional and fire protection sockets. It is secured with ease using tension springs or a screw connection on the box.

Control and monitoring via central 24 V low-power system. The innovative integrated lens holder with a rapid fitting fixture permits the flexible use of various lens types. Using the right lens allows the distribution of light to be matched perfectly to the application and simplifies illumination which satisfies all relevant standards. A round lens and corridor lens are supplied with every luminaire, allowing it to be adapted perfectly to the respective mounting situation. Other lenses, such as a spotlight lens, beam lens or H lens, are available as options.

CE

More information
www.rp-group.com/en/item/EERL529CC-E

TECHNICAL DATA

Luminaire type	Emergency light
Mounting	Ceiling mounting
Pictograph	No
Illuminant	LED
Housing material	Zinc die-cast
Housing color	Stainless steel
Protection type (IP)	IP20
Impact resistance (IK)	≥ 3
Certification	Waste disposal, CE
Insulation class	3
Supply	Centralised power supply systems
Monitoring	CoreCompact 24 (CC)
Bridging time	CPS
Battery	/
Operating mode	Non-maintained / maintained

Input voltage AC	24 V
Power max.	1,5 W
Power maintained	1,5 W
Power non-maintained	0,4 W
Ambient temperature maintained mode	-5 °C to 40 °C
Ambient temperature non-maintained mode	-5 °C to 40 °C
Height	4 mm
Diameter	88 mm
Installation dimensions Diameter	68 mm
Weight	0.26
Weight incl. packaging	0.39
Connection cross-section	2.5 mm²
Switching input	No
Emergency light blocking	No
Battery connection	No
Dimming function	Yes
Luminous flux mains	140 lm
Luminous flux emergency	140 lm
Customs tariff number	94056180
GTIN	4260682157102

TECHNICAL DRAWING

Maße EER / EEQ

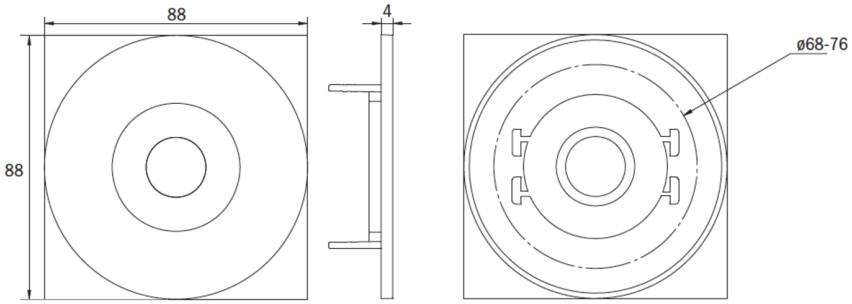

Einzelbatterie-Elektronik-Box (UH-1)

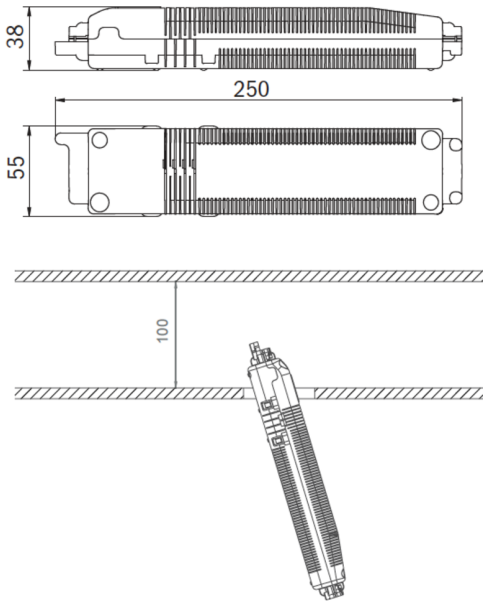

Lochausschnitt EER / EEQ

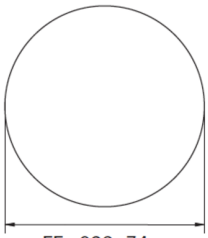

EExx023: 74mm
EExx029: 68mm

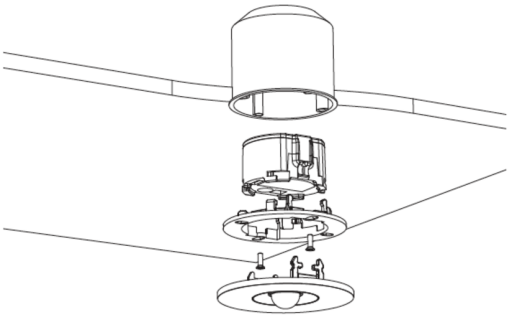

EExx029: Schalterdose notwendig (nicht im Lieferumfang enthalten)

RP GROUP
SOLUTIONS IN SAFETY + LIGHTING

RELATED PRODUCTS

Art.-No.	Image	Monitoring	Supply	Color	Investment	Automatic log	Maintenance level	Remote maintenance	max. luminaires	Single luminaire monitoring
EERL029ML		Central power supply (ML)	Central power supply	RAL 9003	€€€	Yes	low	Yes	1,920 per system	central
EERL029ML-AZ		Central power supply (ML)	Central power supply	RAL 7016	€€€	Yes	low	Yes	1,920 per system	central
EERL029ML-AZ-DOSE		Central power supply (ML)	Central power supply	RAL 7016	€€€	Yes	low	Yes	1,920 per system	central
EERL029ML-DOSE		Central power supply (ML)	Central power supply	RAL 9003	€€€	Yes	low	Yes	1,920 per system	central
EERL029ML-E	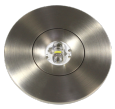	Central power supply (ML)	Central power supply	Edelstahl	€€€	Yes	low	Yes	1,920 per system	central
EERL029ML-E-DOSE	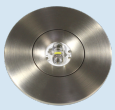	Central power supply (ML)	Central power supply	Edelstahl	€€€	Yes	low	Yes	1,920 per system	central
EERL529CC		CoreCompact 24 (CC)	Central power supply	RAL 9003	€€	Yes	low	Yes		central
EERL529CC-AZ		CoreCompact 24 (CC)	Central power supply	RAL 7016	€€	Yes	low	Yes		central

As of: 16.09.2026 - Subject to technical changes and errors.