RP GROUP
SOLUTIONS IN SAFETY + LIGHTING

Art.-Nr: DDE039ML
Emergency light Centralised power supply systems
Ceiling mounting, Central power supply (ML), CPS, IP40, Zinc die-cast, White

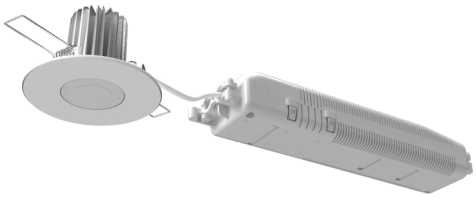

Powerful LED safety luminaire for recessed mounting in the ceiling. Both the spotlight and cooling element are made from high-grade zinc die-cast.

The structure, as well as the material used, ensure good heat dissipation and a long LED life. The compact design permits mounting in a 68mm opening in the ceiling. It is secured with ease using tension springs.

By changing the driver settings a lower power consumption and light output can be achieved.

Approx. 825lm	7,6W	MLED-Driver setting 24V / 300mA
Approx. 410lm	4,6W	MLED-Driver setting 24V / 150mA

Control and monitoring via central power supply system.

More information
www.rp-group.com/en/item/DDE039ML

TECHNICAL DATA

Luminaire type	Emergency light
Mounting	Ceiling mounting
Pictograph	No
Illuminant	LED
Housing material	Zinc die-cast
Housing color	White
Protection type (IP)	IP40
Impact resistance (IK)	8
Certification	Waste disposal, CE, Type-tested, ENEC
Insulation class	2
Supply	Centralised power supply systems
Monitoring	Central power supply (ML)
Bridging time	CPS
Battery	/
Operating mode	single luminaire switching
Input voltage AC	230 V

Input frequency	50 / 60 Hz
Input voltage DC	216 V
Power max.	9,6 W
Power maintained	9,6 W
Power non-maintained	1,1 W
Ambient temperature maintained mode	-10 °C to 40 °C
Ambient temperature non-maintained mode	-10 °C to 50 °C
Height	58 mm
Diameter	88 mm
Installation height	110 mm
Installation dimensions Diameter	68 mm
Weight	0.4
Weight incl. packaging	0.53
Connection cross-section	2.5 mm²
Switching input	Yes
Emergency light blocking	No
Battery connection	No
Dimming function	Yes
Luminous flux mains	1100 lm
Luminous flux emergency	1100 lm
Customs tariff number	94056180
GTIN	4260682158284

TECHNICAL DRAWING

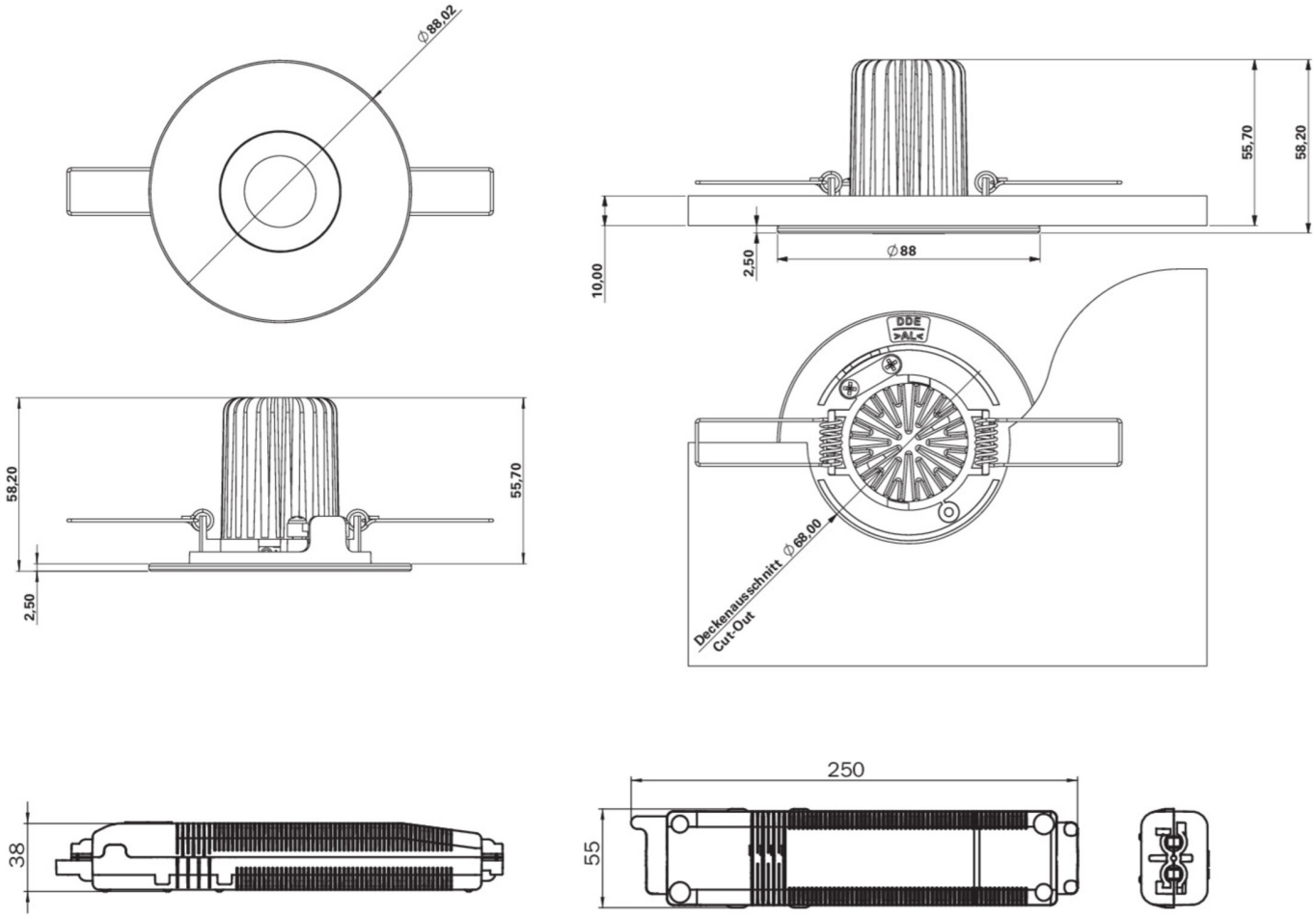

ACCESSORY LIST

BALLPLX-ILE - Wire mesh surround

RELATED PRODUCTS

Art.-No.	Image	Monitoring	Supply	Color	Investment	Automatic log	Maintenance level	Remote maintenance	max. luminaires	Single luminaire monitoring

As of: 16.09.2026 - Subject to technical changes and errors.