RP GROUP
SOLUTIONS IN SAFETY + LIGHTING

Art.-Nr: AMC403SC-AZ
Exit sign Self-contained
Ceiling mounting, SelfControl (SC), 3 h, 22 m, IP20, Zinc die-cast, Anthracite, Set of pictograms

Modern zinc die-cast emergency exit sign luminaire for recessed mounting in the ceiling. Escape and emergency routes can be identified on either one or two sides.

It is part of the A series luminaire family, which provides solutions for any mounting and has won the German Design Award for its uniform, straight-line design.

Automatic monitoring of safety luminaire with SelfControl. Planning certainty is provided by tool-free, variable use of the pictograms on site. A set of pictograms corresponding to DIN ISO 7010 (arrow to the right, left, up and down) is supplied as standard.

More information
www.rp-group.com/en/item/AMC403SC-AZ

TECHNICAL DATA

Luminaire type	Exit sign
Mounting	Ceiling mounting
Recognition distance	22 m
Pictograph	Set
Illuminant	LED
Housing material	Zinc die-cast
Housing color	Anthracite
Protection type (IP)	IP20
Impact resistance (IK)	≥ 3
Certification	Waste disposal, CE, 5 Years waranty
Insulation class	2
Supply	Self-contained
Monitoring	SelfControl (SC)
Bridging time	3 h
Battery	LiFePO4 3,2 V/1,2 Ah
Operating mode	Non-maintained / maintained
Input voltage AC	180 V - 230 V

Input frequency	50 Hz
Power non-maintained	0,9 W
Ambient temperature maintained mode	-5 °C to 40 °C
Ambient temperature non-maintained mode	-5 °C to 40 °C
Depth	80 mm
Width	236 mm
Height	214 mm
Installation length	176 mm
Installation width	68 mm
Installation height	40 mm
Weight	1.14
Weight incl. packaging	1.5
Connection cross-section	2,5 mm²
Switching input	Yes
Emergency light blocking	No
Battery connection	Connector
Dimming function	No
Customs tariff number	94056180
GTIN	4260766554438

TECHNICAL DRAWING

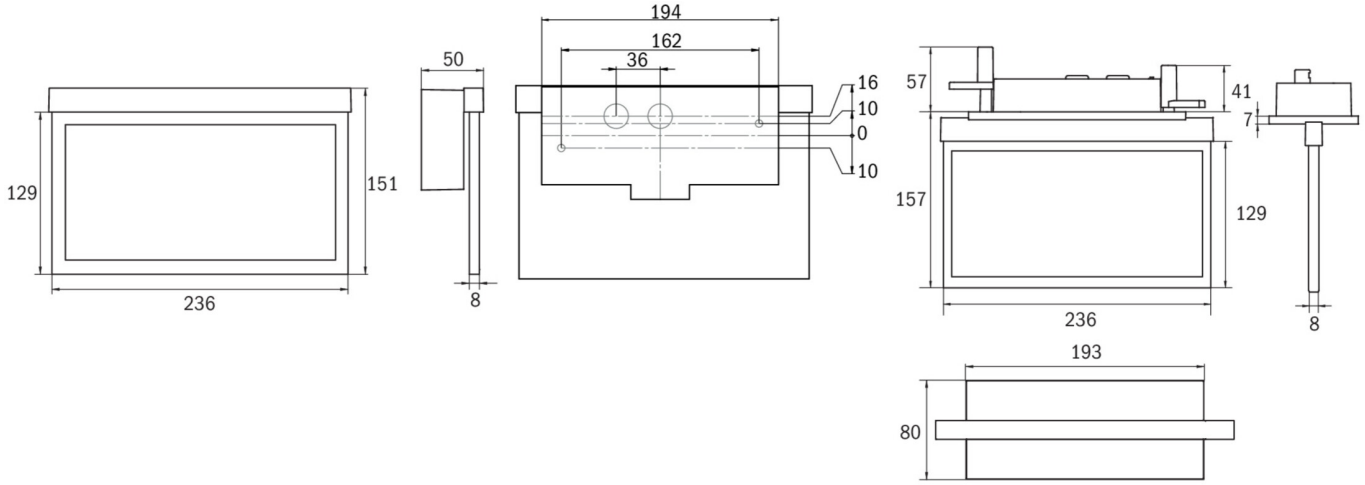

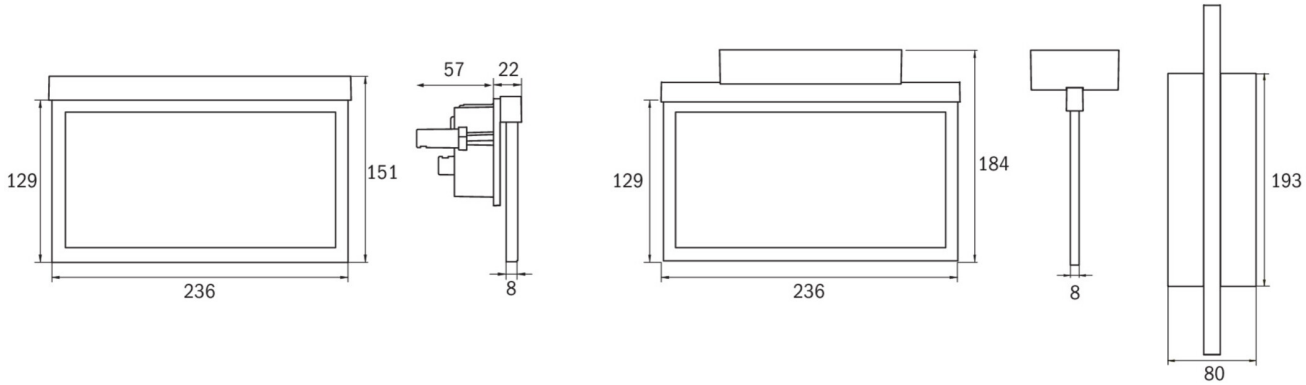

ACCESSORY LIST

AM-XBE - Flush-mounted box

As of: 16.09.2026 - Subject to technical changes and errors.