RP GROUP
SOLUTIONS IN SAFETY + LIGHTING

Art.-Nr: WKW413SC
Exit sign Self-contained
Wall mounting, SelfControl (SC), 3 h, 36 m, IP20, Metal, White, printed pictograms

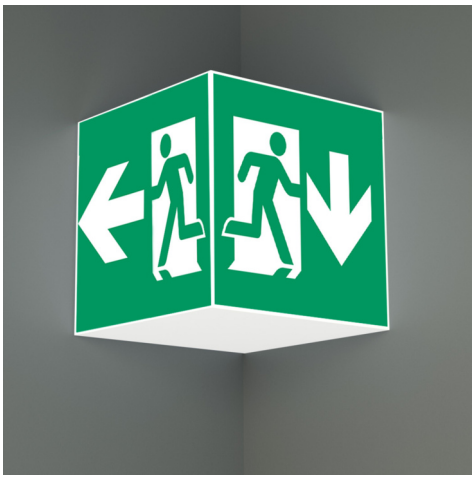

Square emergency exit sign cube luminaire for wall mounting for illuminating escape and emergency routes.

The cube shape means that this plastic luminaire is easily recognisable from three sides. Ideal for large-scale applications, e.g. in large stores.

Automatic monitoring of safety luminaire with SelfControl. Planning certainty is provided by printed pictograms, determined on the basis of logic. The pictograms used correspond to DIN ISO 7010 (arrow to the right, left and down).

More information
www.rp-group.com/en/item/WKW413SC

TECHNICAL DATA

Luminaire type	Exit sign
Mounting	Wall mounting
Recognition distance	36 m
Pictograph	Set
Illuminant	LED
Housing material	Metal
Housing color	White
Protection type (IP)	IP20
Impact resistance (IK)	≥ 3
Certification	Waste disposal, CE, 5 Years waranty
Insulation class	1
Supply	Self-contained
Monitoring	SelfControl (SC)
Bridging time	3 h
Battery	LiFePO4 3,2 V/3,3 Ah
Operating mode	Non-maintained / maintained
Input voltage AC	180 V - 250 V
Input frequency	50 Hz

Power max.	8,2 W
Power maintained	7 W
Power non-maintained	2 W
Ambient temperature maintained mode	-5 °C to 40 °C
Ambient temperature non-maintained mode	-5 °C to 40 °C
Depth	195 mm
Width	195 mm
Height	195 mm
Weight	0.87
Weight incl. packaging	1.01
Connection cross-section	2,5 mm²
Switching input	Yes
Emergency light blocking	No
Battery connection	Connector
Dimming function	No
Luminous flux mains	470 lm
Luminous flux emergency	470 lm
Customs tariff number	94056120
GTIN	4260766556906

RP GROUP
SOLUTIONS IN SAFETY + LIGHTING

TECHNICAL DRAWING

RP GROUP
SOLUTIONS IN SAFETY + LIGHTING

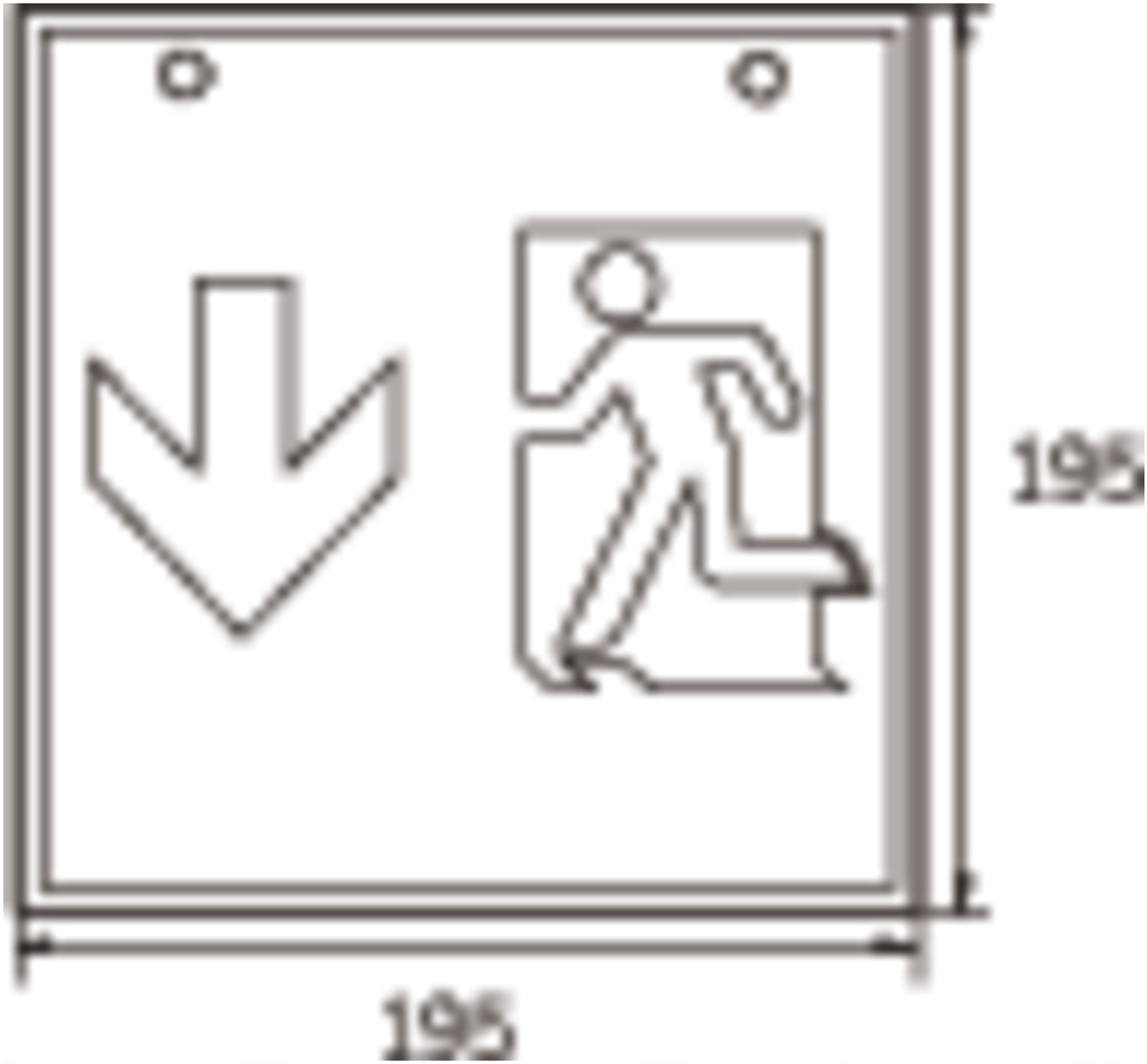

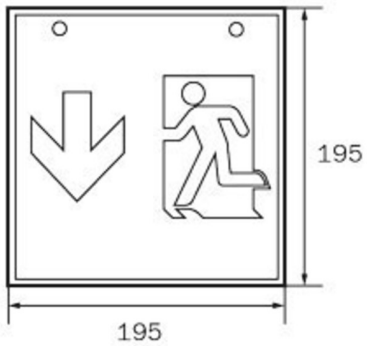

WG

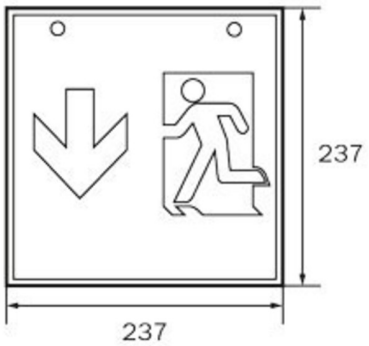

WK

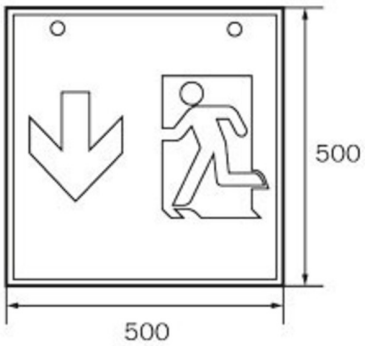

WX

RP GROUP
SOLUTIONS IN SAFETY + LIGHTING

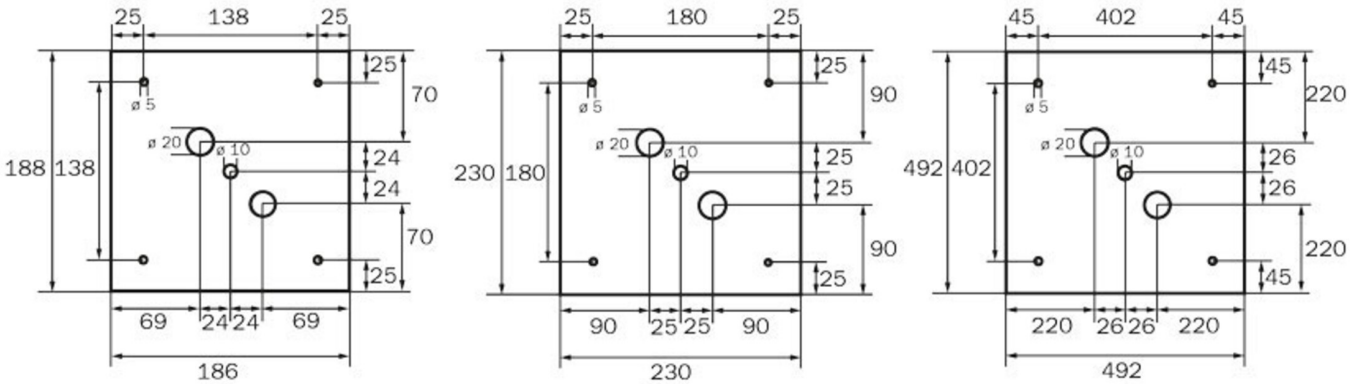

WG WK WX

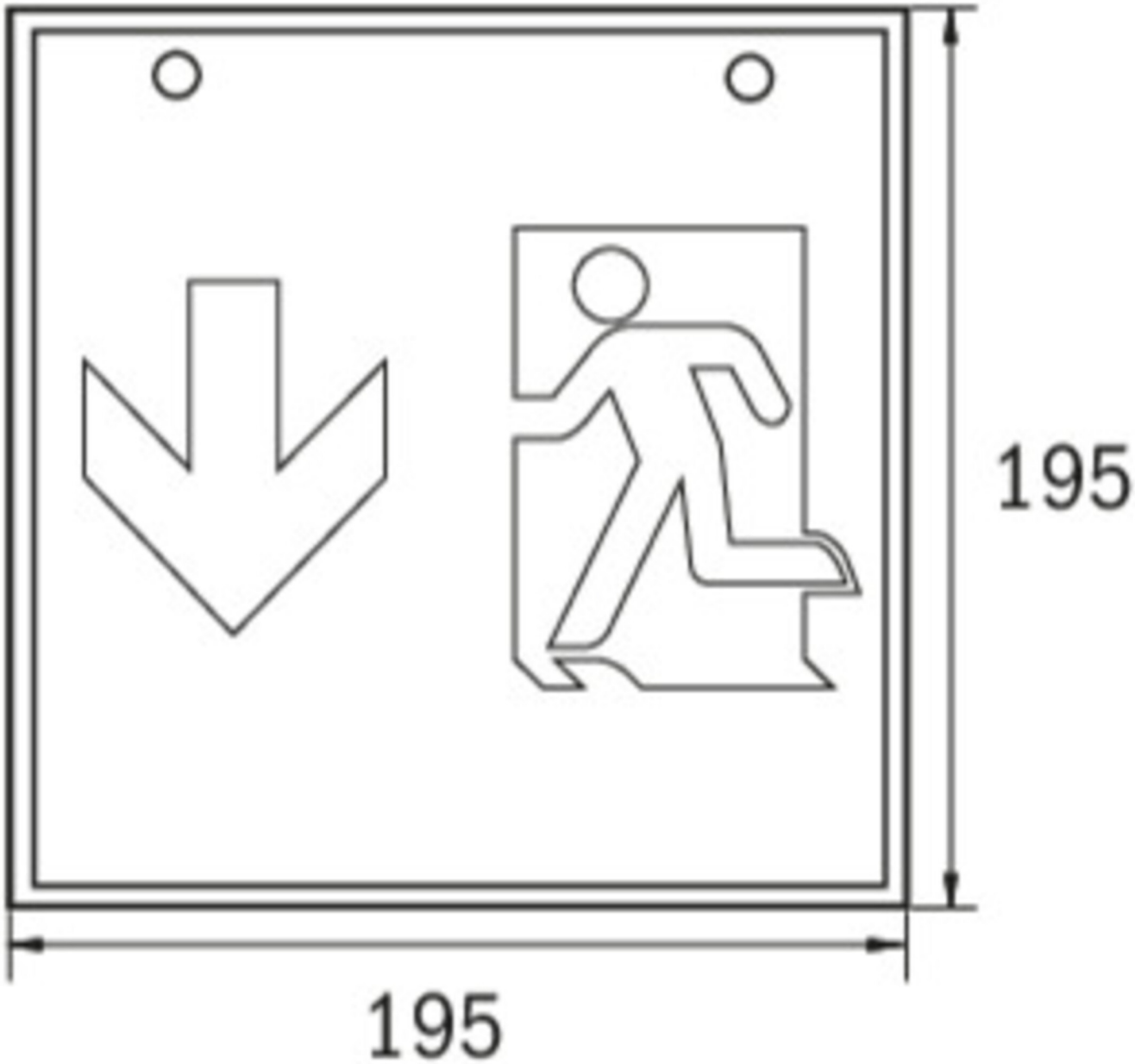

ACCESSORY LIST

LFP3233-SET-2AKKU - Battery

As of: 16.09.2026 - Subject to technical changes and errors.