RP GROUP
SOLUTIONS IN SAFETY + LIGHTING

Art.-Nr: WGW411SC
Exit sign Self-contained
Wall mounting, SelfControl (SC), 1 h, 46 m, IP20, Metal, White

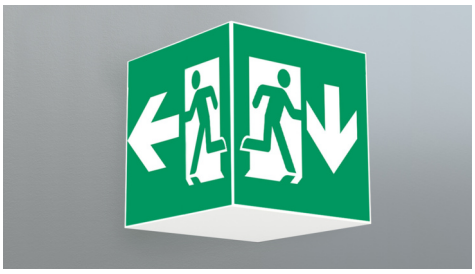

Square emergency exit sign cube luminaire for wall mounting for illuminating escape and emergency routes.

The cube shape means that this plastic luminaire is easily recognisable from three sides. Ideal for large-scale applications, e.g. in large stores.

Automatic monitoring of safety luminaire with SelfControl.

More information
www.rp-group.com/en/item/WGW411SC

TECHNICAL DATA

Luminaire type	Exit sign
Mounting	Wall mounting
Recognition distance	46 m
Pictograph	Set
Illuminant	LED
Housing material	Metal
Housing color	White
Protection type (IP)	IP20
Impact resistance (IK)	≥ 3
Certification	Waste disposal, CE, 5 Years waranty
Insulation class	1
Supply	Self-contained
Monitoring	SelfControl (SC)
Bridging time	1 h
Battery	LiFePO4 3,2 V/1,6 Ah
Operating mode	Non-maintained / maintained
Input voltage AC	180 V - 250 V
Input frequency	50 Hz
Power max.	6,4 W
Power maintained	5,6 W
Power non-maintained	2 W

Ambient temperature maintained mode	-5 °C to 40 °C
Ambient temperature non-maintained mode	-5 °C to 40 °C
Depth	237 mm
Width	237 mm
Height	237 mm
Weight	1.23
Weight incl. packaging	1.37
Connection cross-section	2,5 mm²
Switching input	Yes
Emergency light blocking	No
Battery connection	Connector
Dimming function	No
Luminous flux mains	470 lm
Luminous flux emergency	470 lm
Customs tariff number	94056120
GTIN	4260766556838

RP GROUP
SOLUTIONS IN SAFETY + LIGHTING

TECHNICAL DRAWING

RP GROUP
SOLUTIONS IN SAFETY + LIGHTING

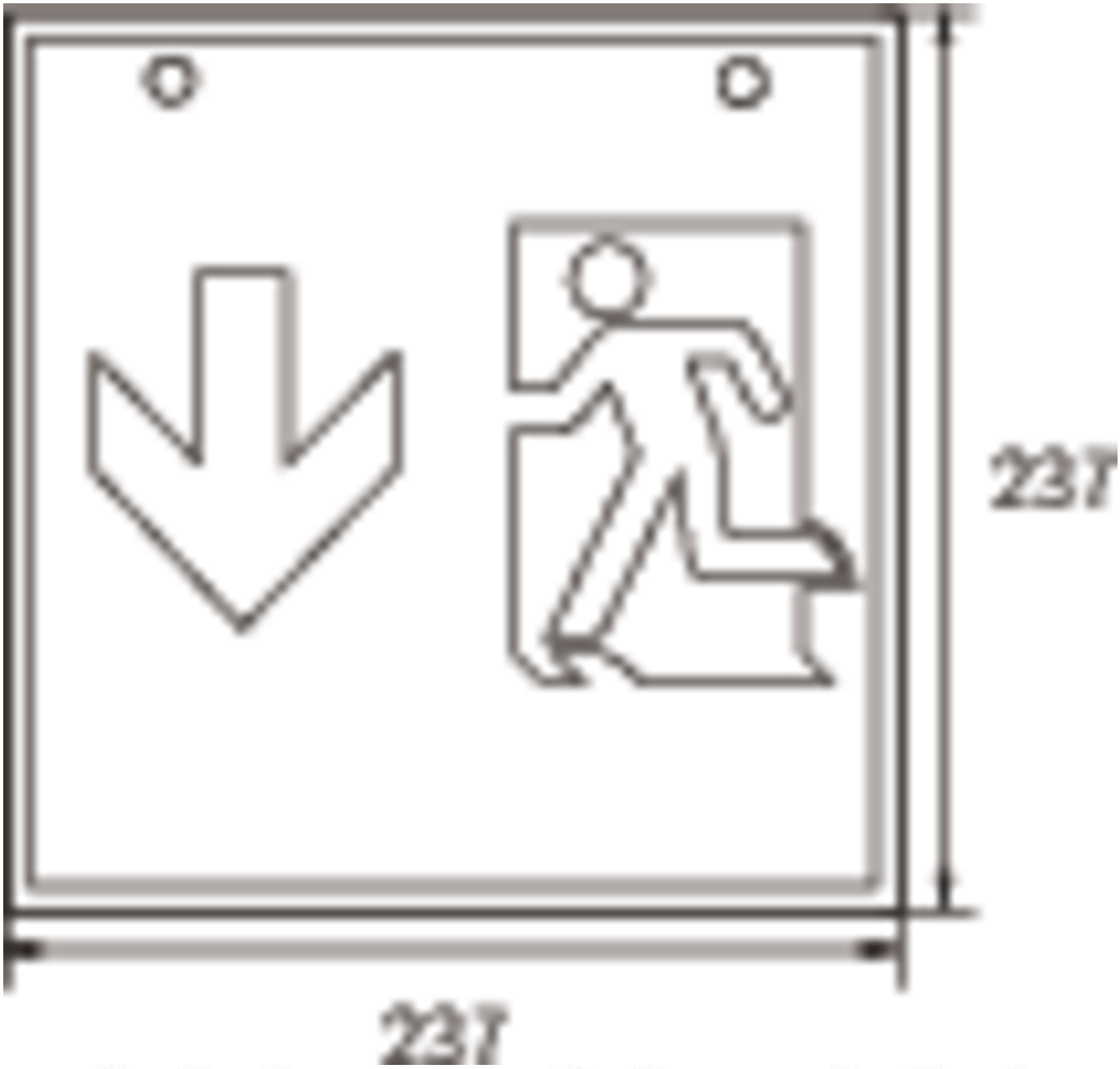

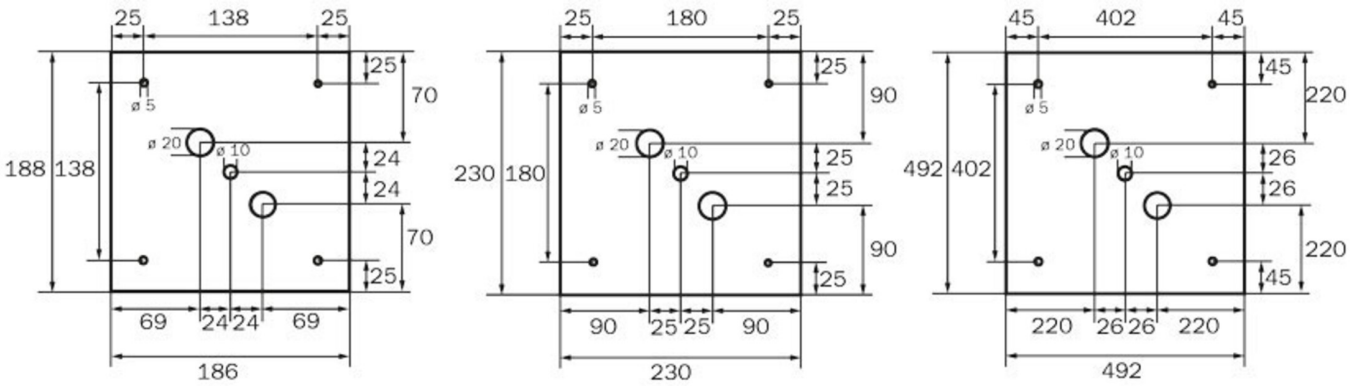

RP GROUP
SOLUTIONS IN SAFETY + LIGHTING

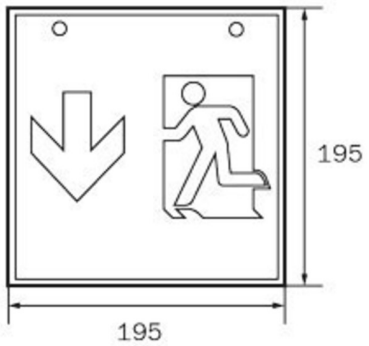

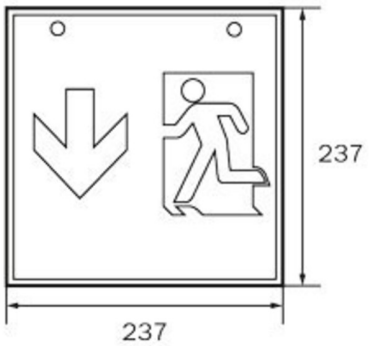

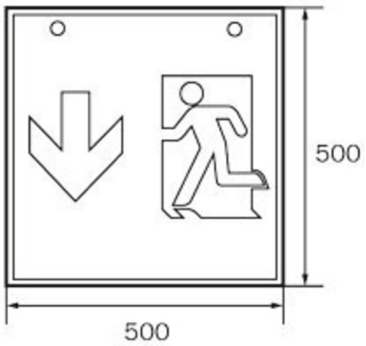

WG WK WX

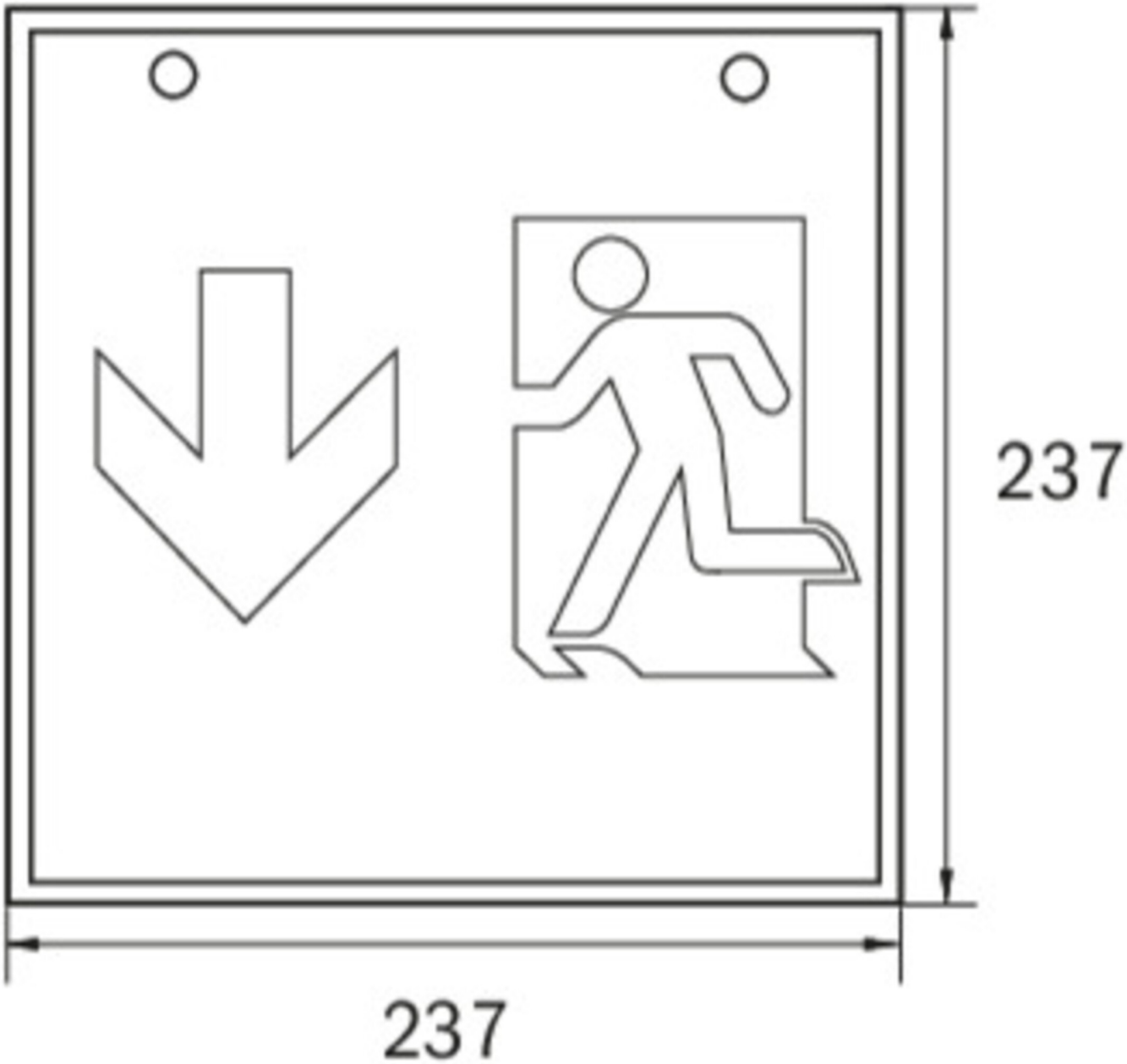

ACCESSORY LIST

LFP3216-SET-2AKKU - Battery

As of: 16.09.2026 - Subject to technical changes and errors.