RP GROUP
SOLUTIONS IN SAFETY + LIGHTING

## Art.-Nr: AMRA403SC
## Exit sign Self-contained
## Wall-mounted flag, SelfControl (SC), 3 h, 22 m, IP20, Zinc die-cast, White, Set of pictograms

Modern zinc die-cast emergency exit sign luminaire for recessed mounting in the wall. Thanks to the wall bracket, the escape and emergency routes are identified at right angles to the wall. This can be done on either one or two sides.

It is part of the A series luminaire family, which provides solutions for any mounting and has won the German Design Award for its uniform, straight-line design.

Automatic monitoring of safety luminaire with SelfControl. Planning certainty is provided by tool-free, variable use of the pictograms on site. A set of pictograms corresponding to DIN ISO 7010 (arrow to the right, left, up and down) is supplied as standard.

More information
www.rp-group.com/en/item/AMRA403SC

## TECHNICAL DATA

| | |
|---|---|
| Luminaire type | Exit sign |
| Mounting | Wall-mounted flag |
| Recognition distance | 22 m |
| Pictograph | Set |
| Illuminant | LED |
| Housing material | Zinc die-cast |
| Housing color | White |
| Protection type (IP) | IP20 |
| Impact resistance (IK) | ≥ 3 |
| Certification | Waste disposal, CE, 5 Years waranty |
| Insulation class | 2 |
| Supply | Self-contained |
| Monitoring | SelfControl (SC) |
| Bridging time | 3 h |
| Battery | LiFePO4 3,2 V/1,2 Ah |
| Operating mode | Non-maintained / maintained |
| Input voltage AC | 180 V - 230 V |

| | |
|---|---|
| Input frequency | 50 Hz |
| Power non-maintained | 0,9 W |
| Ambient temperature maintained mode | -5 °C to 40 °C |
| Ambient temperature non-maintained mode | -5 °C to 40 °C |
| Depth | 79 mm |
| Width | 306 mm |
| Height | 196 mm |
| Installation length | 176 mm |
| Installation width | 68 mm |
| Installation height | 40 mm |
| Weight | 1.52 |
| Weight incl. packaging | 1.88 |
| Connection cross-section | 2,5 mm² |
| Switching input | Yes |
| Emergency light blocking | No |
| Battery connection | Connector |
| Dimming function | No |
| Customs tariff number | 94056180 |
| GTIN | 4260766555022 |

## TECHNICAL DRAWING

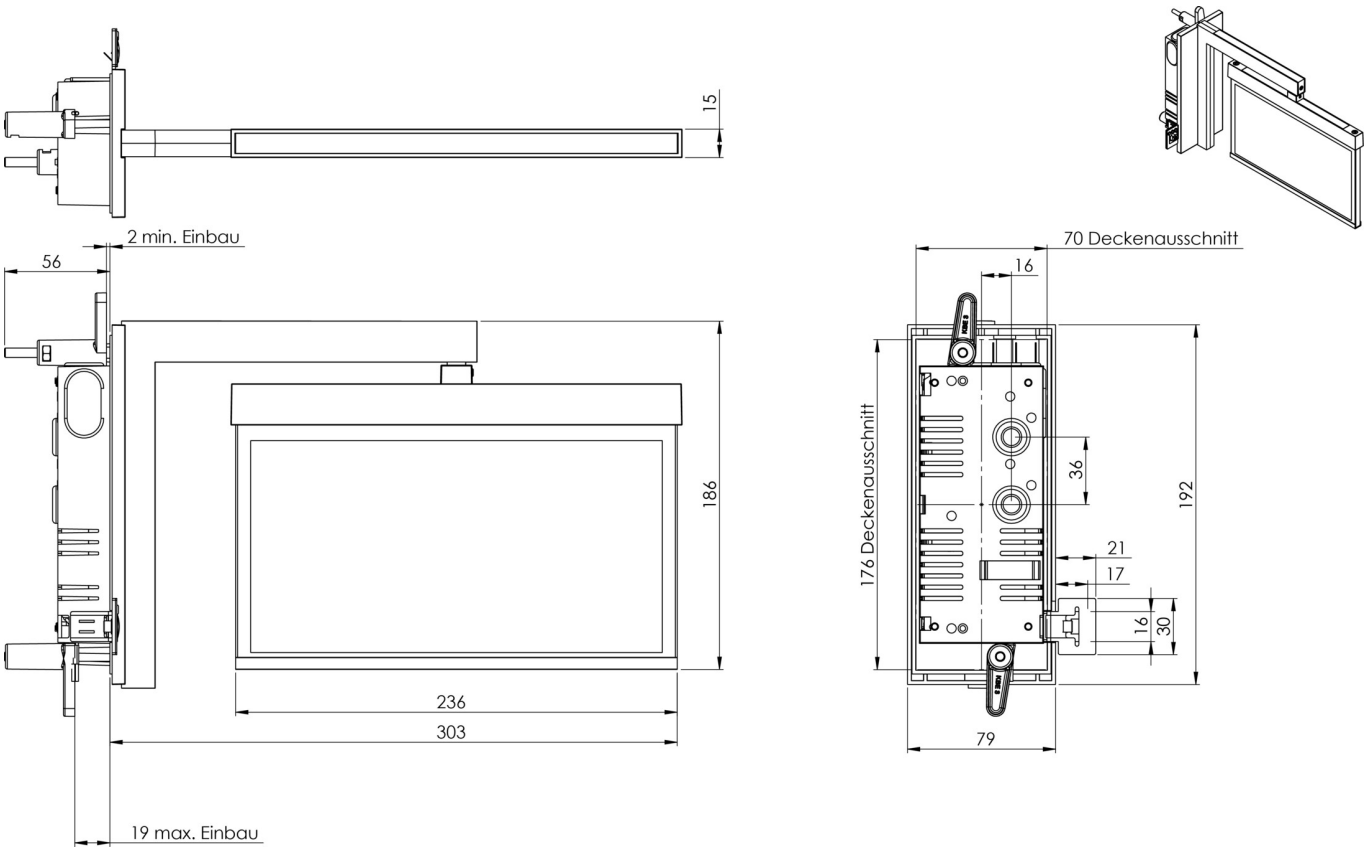


## ACCESSORY LIST

AM-XBE - Flush-mounted box

As of: 16.09.2026 - Subject to technical changes and errors.