RP GROUP
SOLUTIONS IN SAFETY + LIGHTING

Art.-Nr: WEF428WL-E
Emergency light Self-contained
Recessed wall mounting, Wireless Professional (WL), 8 h, IP20, Zinc die-cast, Stainless steel

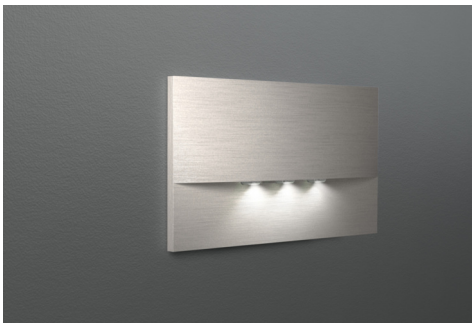

High-grade zinc die-cast safety luminaire for recessed mounting in the wall. This is intended for mounting in conventional double switch boxes where the mounting frame can be aligned to the box. The zinc die-cast ornamental cover is locked using a fastener that cannot be seen from the outside.

The radiating characteristics run parallel to the wall to help perfectly illuminate escape and emergency routes.

Wireless central control and monitoring for large installations of up to 50,000 luminaires with Wireless Professional.

More information
www.rp-group.com/en/item/WEF428WL-E

TECHNICAL DATA

Luminaire type	Emergency light
Mounting	Recessed wall mounting
Pictograph	No
Illuminant	LED
Housing material	Zinc die-cast
Housing color	Stainless steel
Protection type (IP)	IP20
Impact resistance (IK)	7
Certification	Waste disposal, CE, 5 Years waranty
Insulation class	2
Supply	Self-contained
Monitoring	Wireless Professional (WL)
Bridging time	8 h
Battery	LiFePO4 3,2 V/1,2 Ah
Operating mode	Non-maintained / maintained
Input voltage AC	230 V
Input frequency	50 Hz
Power max.	5,1 W

Power maintained	3,9 W
Power non-maintained	0,8 W
Ambient temperature maintained mode	-5 °C to 40 °C
Ambient temperature non-maintained mode	-5 °C to 40 °C
Depth	20 mm
Width	161 mm
Height	107 mm
Installation length	155 mm
Installation width	82 mm
Installation height	70 mm
Weight	0.52
Weight incl. packaging	0.55
Connection cross-section	2.5 mm²
Switching input	Yes
Emergency light blocking	Yes
Battery connection	Connector
Dimming function	Yes
Luminous flux mains	470 lm
Luminous flux emergency	75 lm
Customs tariff number	94056180
GTIN	4260766557354

RP GROUP
SOLUTIONS IN SAFETY + LIGHTING

TECHNICAL DRAWING

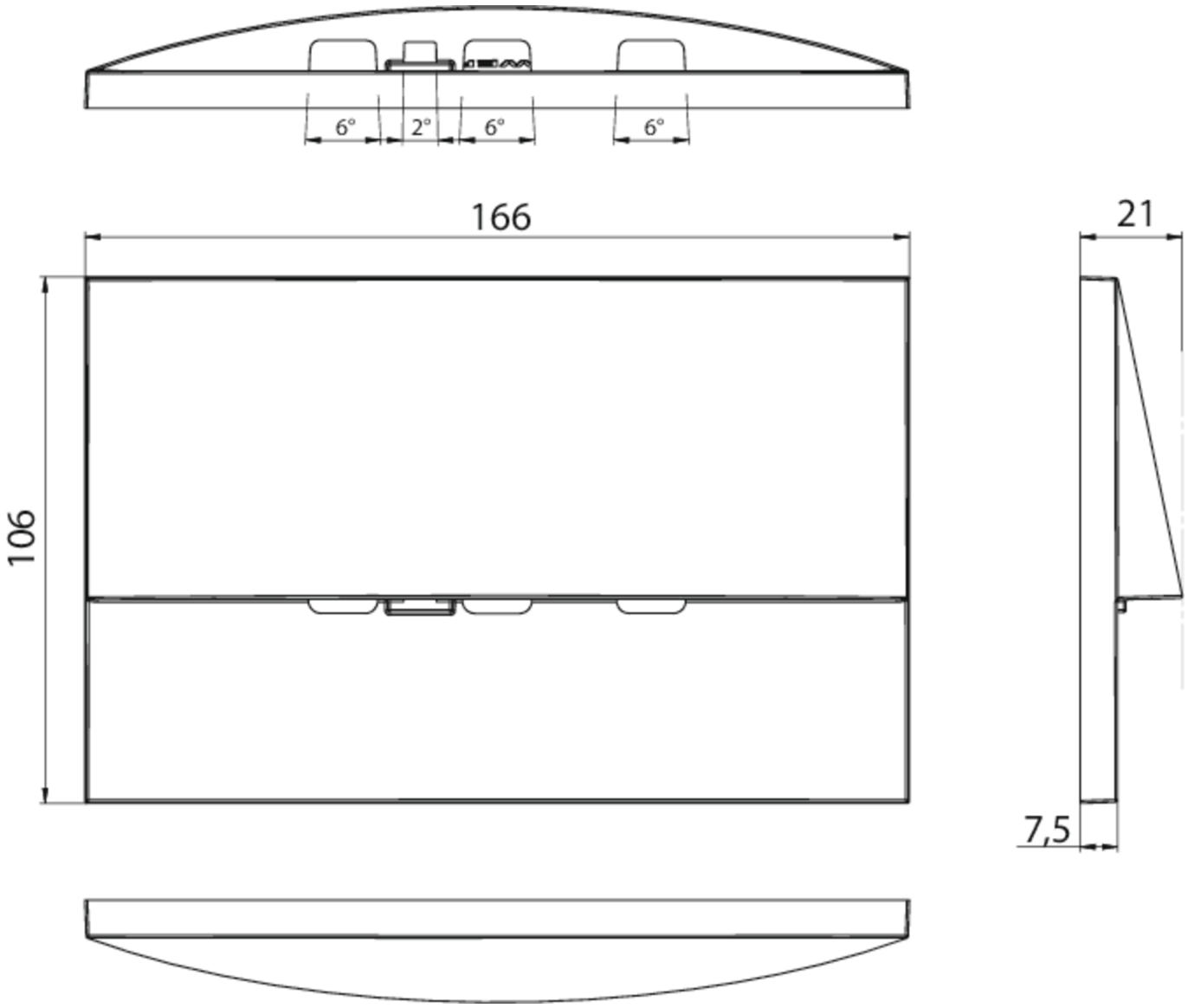
6°
2°
6°
6°
166
21
106
7,5

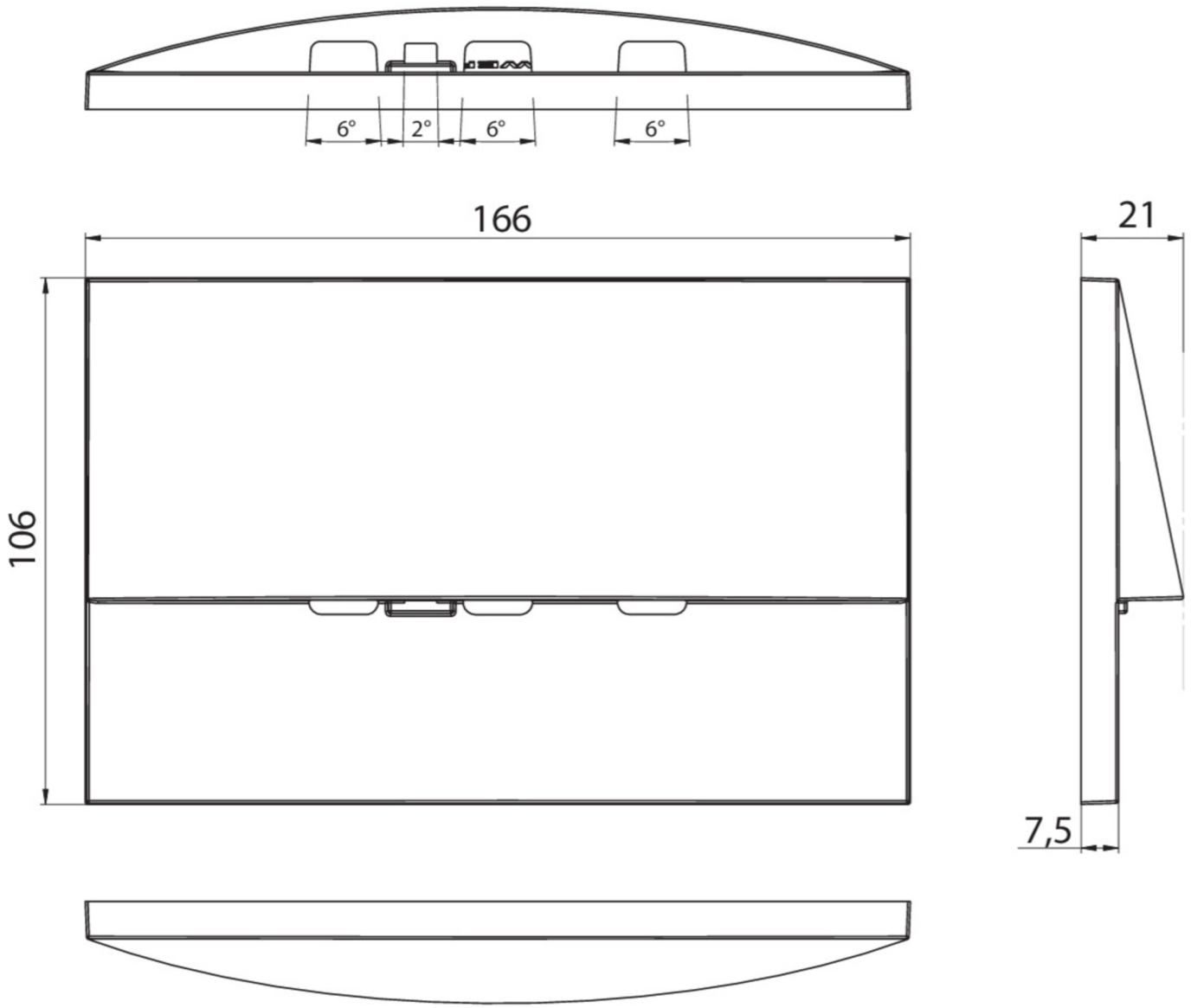

As of: 16.09.2026 - Subject to technical changes and errors.