RP GROUP
SOLUTIONS IN SAFETY + LIGHTING

# Art.-Nr: WKW411WL
# Exit sign Self-contained
# Wall mounting, Wireless Professional (WL), 1 h, 36 m, IP20, Metal, White, printed pictograms

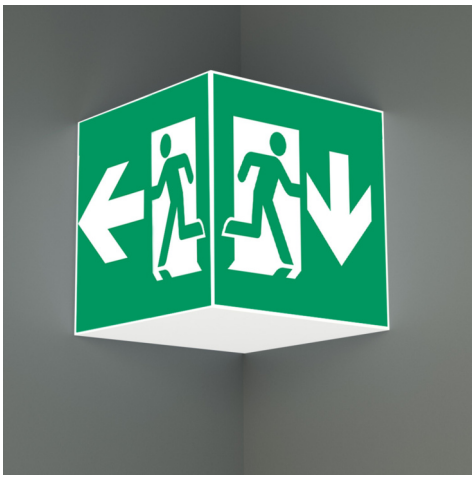

Square emergency exit sign cube luminaire for wall mounting for illuminating escape and emergency routes.

The cube shape means that this plastic luminaire is easily recognisable from three sides. Ideal for large-scale applications, e.g. in large stores.

Wireless central control and monitoring for large installations of up to 50,000 luminaires with Wireless Professional. Planning certainty is provided by printed pictograms, determined on the basis of logic. The pictograms used correspond to DIN ISO 7010 (arrow to the right, left and down).

More information
www.rp-group.com/en/item/WKW411WL

## TECHNICAL DATA

| | |
|---|---|
| Luminaire type | Exit sign |
| Mounting | Wall mounting |
| Recognition distance | 36 m |
| Pictograph | Set |
| Illuminant | LED |
| Housing material | Metal |
| Housing color | White |
| Protection type (IP) | IP20 |
| Impact resistance (IK) | ≥ 3 |
| Certification | Waste disposal, CE, 5 Years waranty |
| Insulation class | 1 |
| Supply | Self-contained |
| Monitoring | Wireless Professional (WL) |
| Bridging time | 1 h |
| Battery | LiFePO4 3,2 V/1,6 Ah |
| Operating mode | Non-maintained / maintained |
| Input voltage AC | 230 V |
| Input frequency | 50 Hz |

| | |
|---|---|
| Power max. | 6,4 W |
| Power maintained | 5,1 W |
| Power non-maintained | 0,8 W |
| Ambient temperature maintained mode | -5 °C to 40 °C |
| Ambient temperature non-maintained mode | -5 °C to 40 °C |
| Depth | 195 mm |
| Width | 195 mm |
| Height | 195 mm |
| Weight | 0.84 |
| Weight incl. packaging | 0.98 |
| Connection cross-section | 2.5 mm² |
| Switching input | Yes |
| Emergency light blocking | Yes |
| Battery connection | Connector |
| Dimming function | Yes |
| Luminous flux mains | 470 lm |
| Luminous flux emergency | 470 lm |
| Customs tariff number | 94056180 |
| GTIN | 4260766558610 |

RP GROUP
SOLUTIONS IN SAFETY + LIGHTING

## TECHNICAL DRAWING

RP GROUP
SOLUTIONS IN SAFETY + LIGHTING

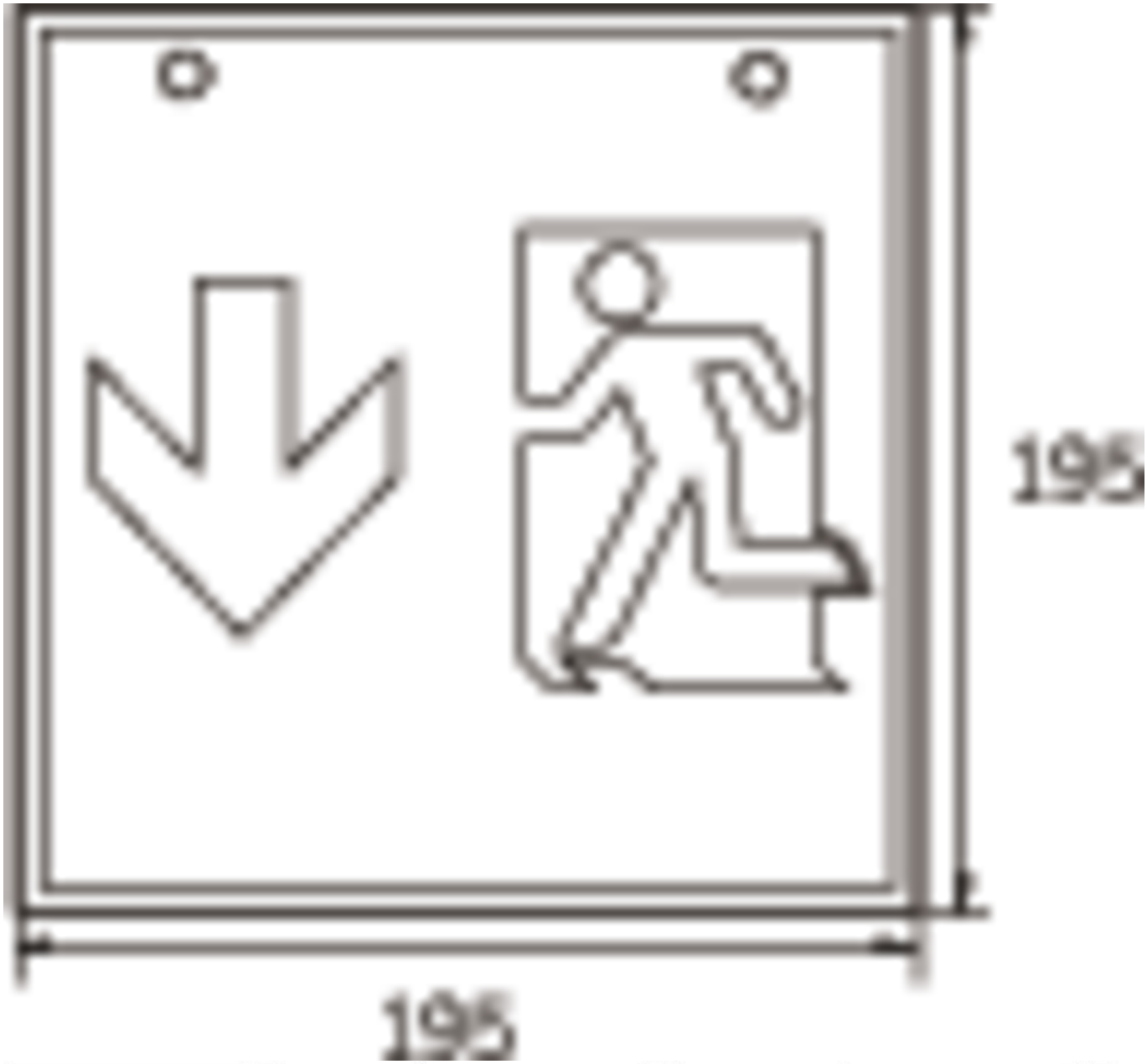


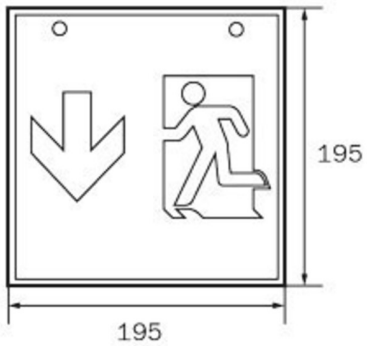


WG

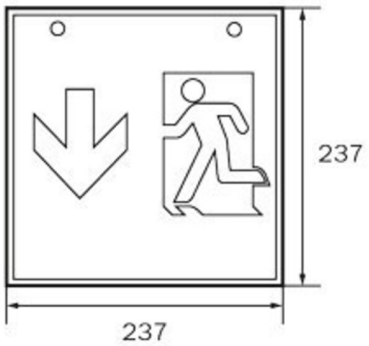


WK

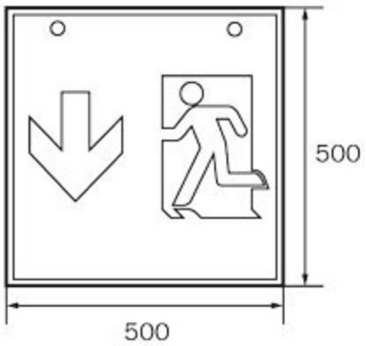


WX

RP GROUP
SOLUTIONS IN SAFETY + LIGHTING

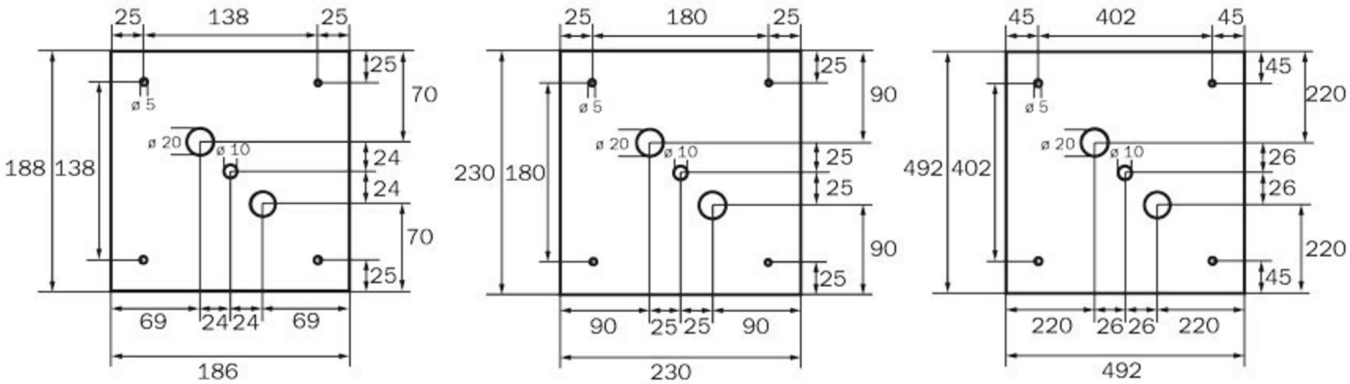


WG WK WX

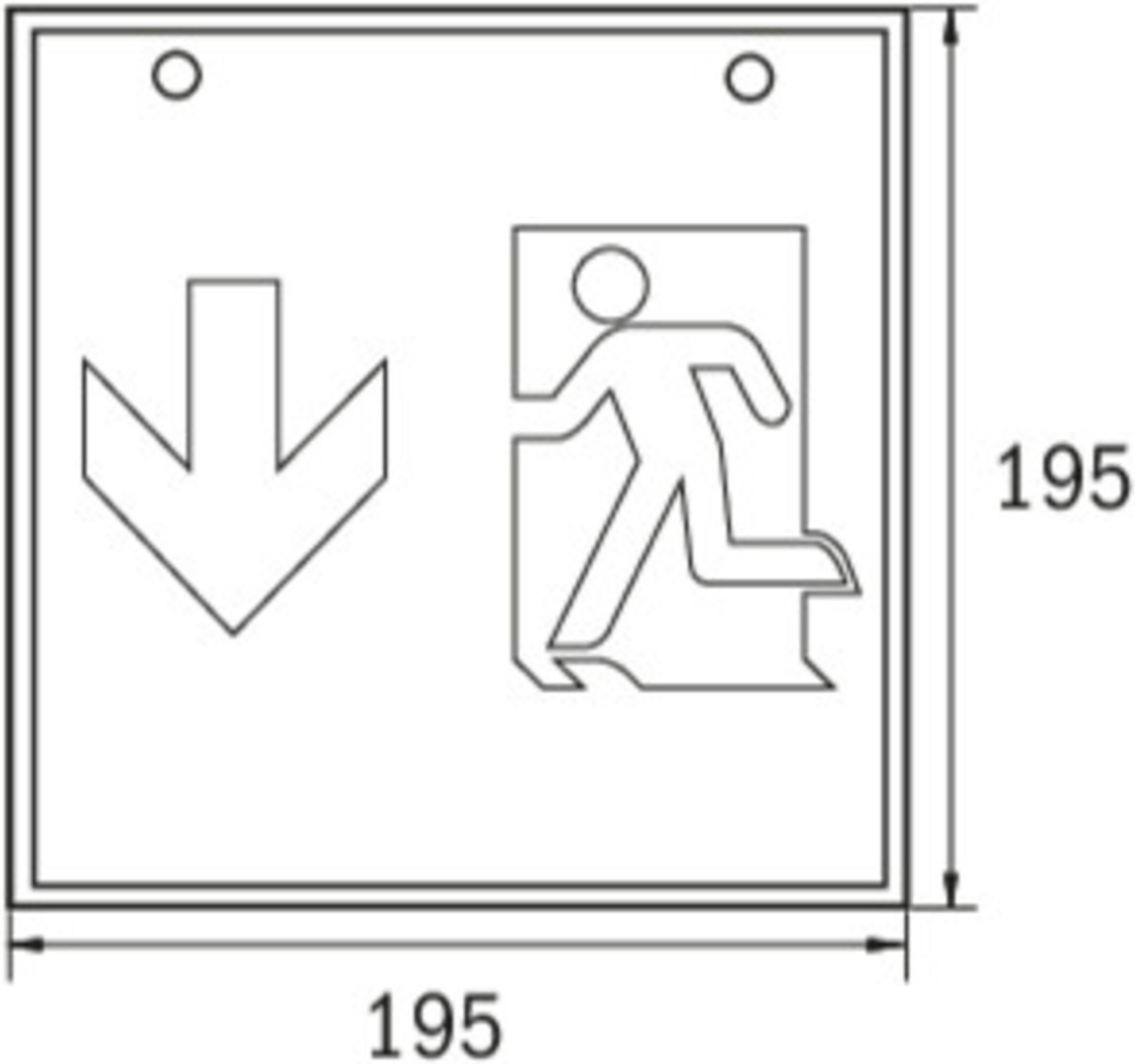

## ACCESSORY LIST

WKO - Set of chain eyelets for cube mounting (4 pieces)

LFP3216-SET-2AKKU - Battery

As of: 16.09.2026 - Subject to technical changes and errors.