RP GROUP
SOLUTIONS IN SAFETY + LIGHTING

Art.-Nr: WKD411WL
Exit sign Self-contained
Surface mounting, Wireless Professional (WL), 1 h, 36 m, IP20, Metal, White, printed pictograms

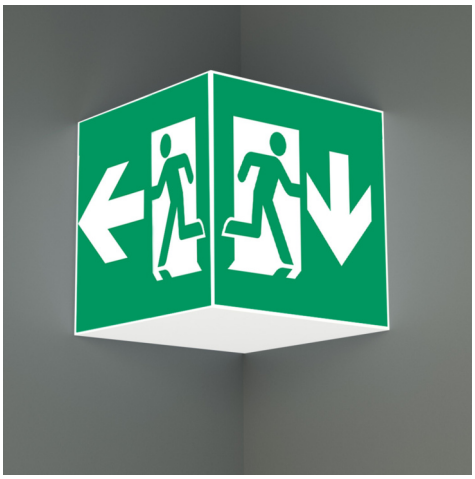

Square emergency exit sign cube luminaire for identifying escape and emergency routes. It can be mounted straight onto the ceiling or suspended using the appropriate accessories.

The cube shape means that this plastic luminaire is easily recognisable from four sides. Ideal for use where routes intersect, e.g. in large stores with aisles.

Wireless central control and monitoring for large installations of up to 50,000 luminaires with Wireless Professional. Planning certainty is provided by printed pictograms, determined on the basis of logic. The pictograms used correspond to DIN ISO 7010 (arrow to the right, left and down).

More information
www.rp-group.com/en/item/WKD411WL

TECHNICAL DATA

Luminaire type	Exit sign
Mounting	Surface mounting
Recognition distance	36 m
Pictograph	Set
Illuminant	LED
Housing material	Metal
Housing color	White
Protection type (IP)	IP20
Impact resistance (IK)	≥ 3
Certification	Waste disposal, CE, 5 Years waranty
Insulation class	1
Supply	Self-contained
Monitoring	Wireless Professional (WL)
Bridging time	1 h
Battery	LiFePO4 3,2 V/1,6 Ah
Operating mode	Non-maintained / maintained
Input voltage AC	230 V

Input frequency	50 Hz
Power max.	6,4 W
Power maintained	5,1 W
Power non-maintained	0,8 W
Ambient temperature maintained mode	-5 °C to 40 °C
Ambient temperature non-maintained mode	-5 °C to 40 °C
Depth	195 mm
Width	195 mm
Height	195 mm
Weight	0.84
Weight incl. packaging	0.98
Connection cross-section	2.5 mm²
Switching input	Yes
Emergency light blocking	Yes
Battery connection	Connector
Dimming function	Yes
Luminous flux mains	470 lm
Luminous flux emergency	470 lm
Customs tariff number	94056120
GTIN	4260766558580

RP GROUP
SOLUTIONS IN SAFETY + LIGHTING

TECHNICAL DRAWING

RP GROUP
SOLUTIONS IN SAFETY + LIGHTING

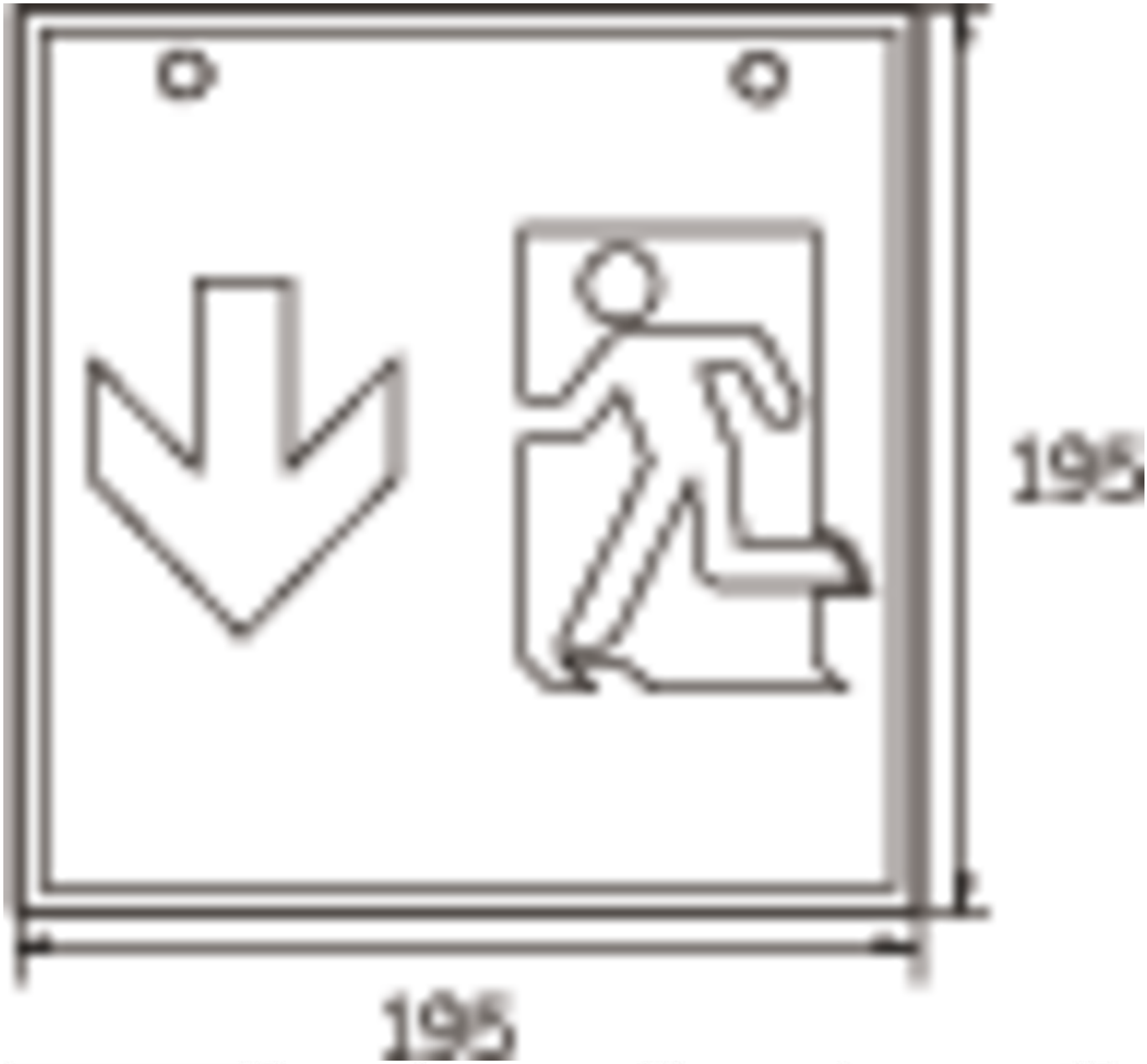

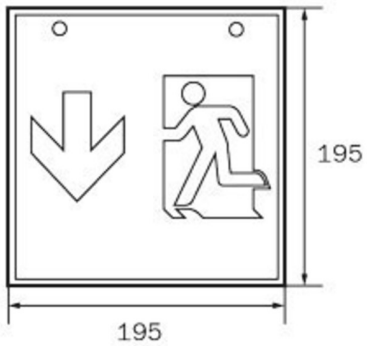

WG

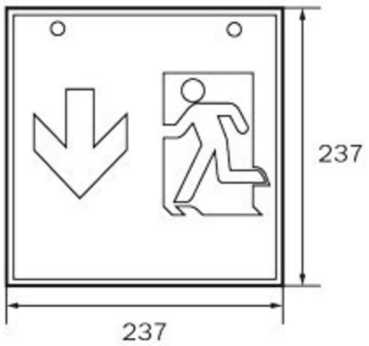

WK

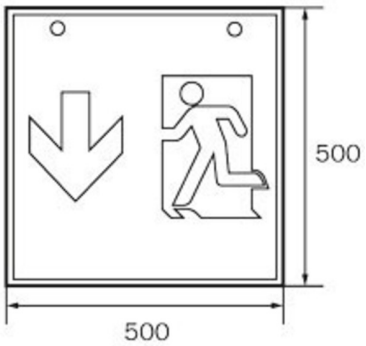

WX

RP GROUP
SOLUTIONS IN SAFETY + LIGHTING

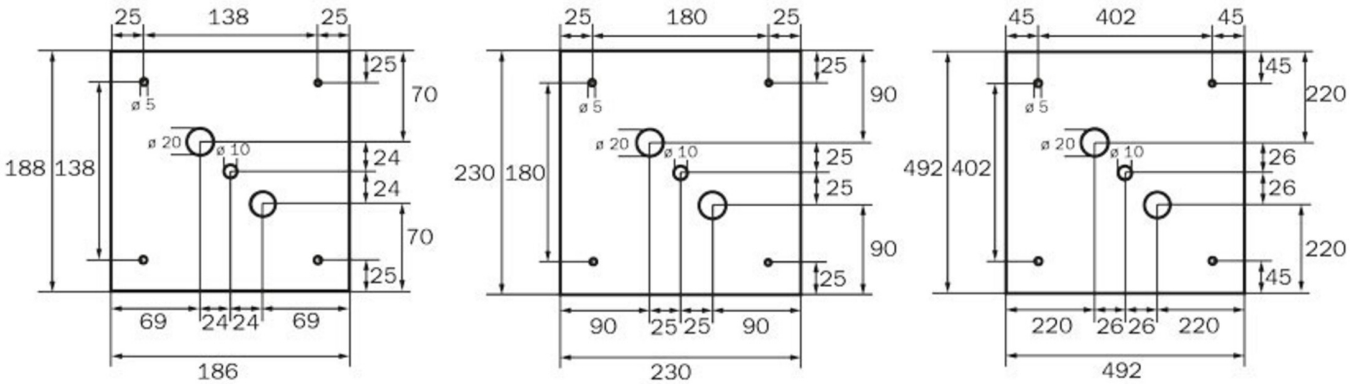

WG WK WX

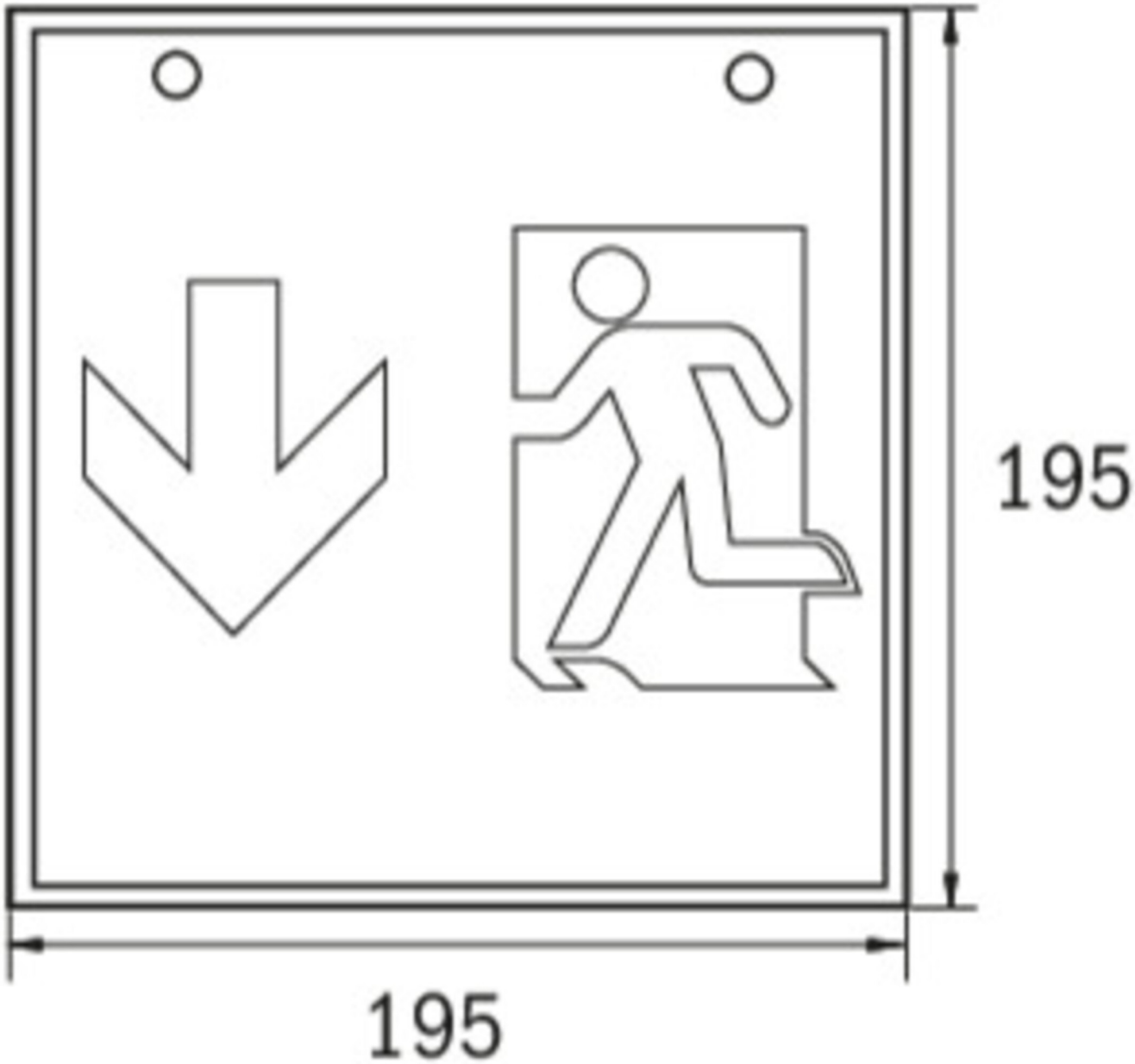

ACCESSORY LIST

WKO - Set of chain eyelets for cube mounting (4 pieces)

1PV-EB - Pendulum

DSA-Y4M - Wire suspension

DSA-Y4M-APA - Wire suspension

LFP3216-SET-2AKKU - Battery

As of: 16.09.2026 - Subject to technical changes and errors.