RP GROUP
SOLUTIONS IN SAFETY + LIGHTING

# Art.-Nr: WXD413WL
# Exit sign Self-contained
# Surface mounting, Wireless Professional (WL), 3 h, 90 m, IP20, Metal, White, printed pictograms

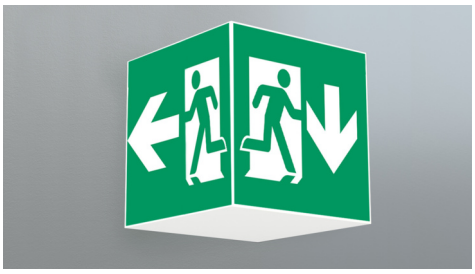

Square emergency exit sign cube luminaire for identifying escape and emergency routes. It can be mounted straight onto the ceiling or suspended using the appropriate accessories.

The cube shape means that this plastic luminaire is easily recognisable from four sides. Ideal for use where routes intersect, e.g. in large stores with aisles.

Wireless central control and monitoring for large installations of up to 50,000 luminaires with Wireless Professional. Planning certainty is provided by printed pictograms, determined on the basis of logic. The pictograms used correspond to DIN ISO 7010 (arrow to the right, left and down).

CE

More information
www.rp-group.com/en/item/WXD413WL

## TECHNICAL DATA

| | |
|---|---|
| Luminaire type | Exit sign |
| Mounting | Surface mounting |
| Recognition distance | 90 m |
| Pictograph | Set |
| Illuminant | LED |
| Housing material | Metal |
| Housing color | White |
| Protection type (IP) | IP20 |
| Impact resistance (IK) | ≥ 3 |
| Certification | Waste disposal, CE |
| Insulation class | 1 |
| Supply | Self-contained |
| Monitoring | Wireless Professional (WL) |
| Bridging time | 3 h |
| Battery | LiFePO4 3,2 V/3,3 Ah |
| Operating mode | Non-maintained / maintained |
| Input voltage AC | 180 V - 250 V |

| | |
|---|---|
| Input frequency | 50 Hz |
| Power max. | 8,2 W |
| Power maintained | 7 W |
| Power non-maintained | 2 W |
| Ambient temperature maintained mode | -5 °C to 40 °C |
| Ambient temperature non-maintained mode | -5 °C to 40 °C |
| Depth | 500 mm |
| Width | 500 mm |
| Height | 500 mm |
| Weight | 6.57 |
| Weight incl. packaging | 6.71 |
| Connection cross-section | 2,5 mm² |
| Switching input | Yes |
| Emergency light blocking | No |
| Battery connection | Connector |
| Dimming function | No |
| Luminous flux mains | 470 lm |
| Luminous flux emergency | 470 lm |
| Customs tariff number | 94056180 |
| GTIN | 4262483029961 |

RP GROUP
SOLUTIONS IN SAFETY + LIGHTING

## TECHNICAL DRAWING

RP GROUP
SOLUTIONS IN SAFETY + LIGHTING

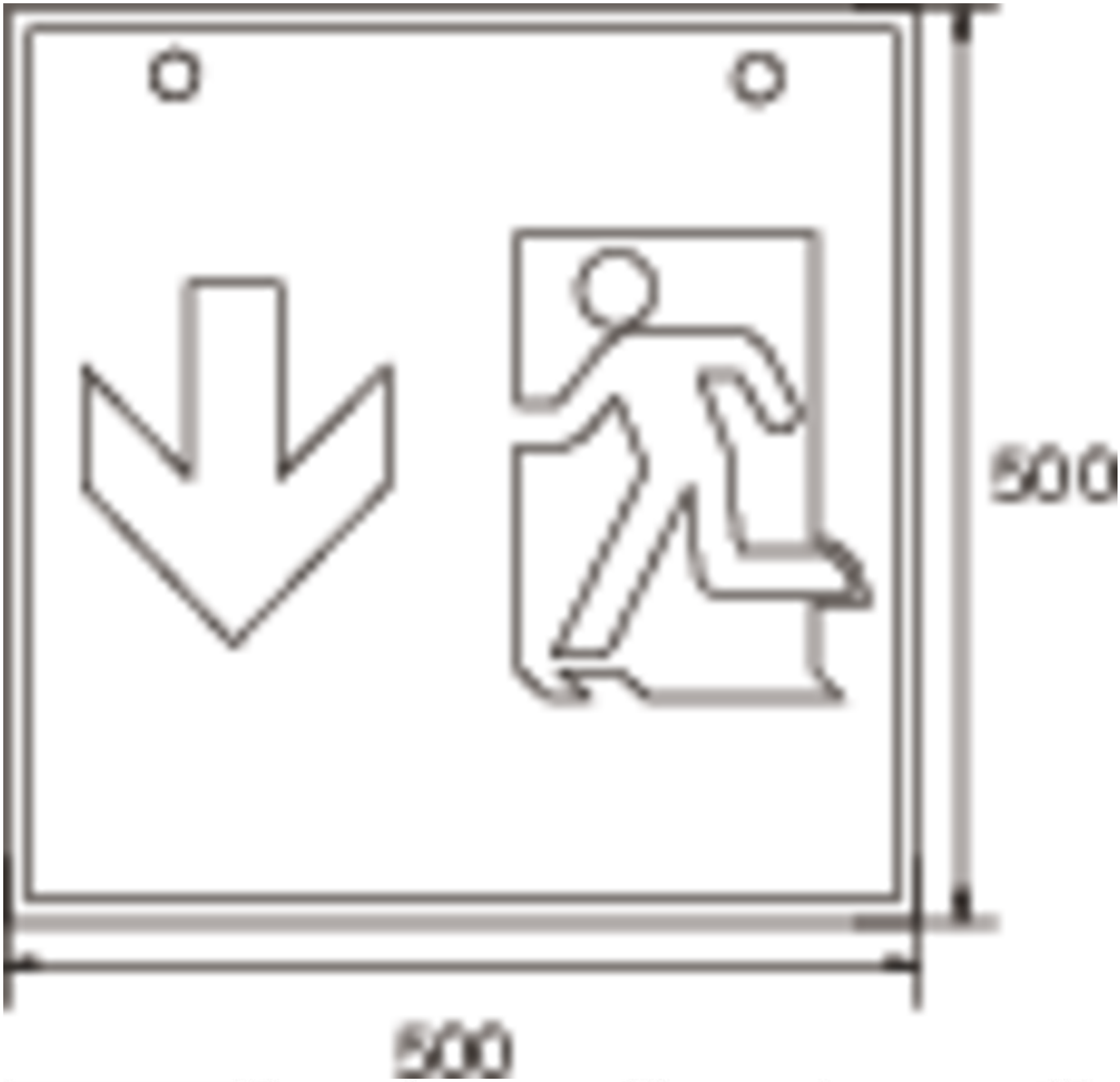


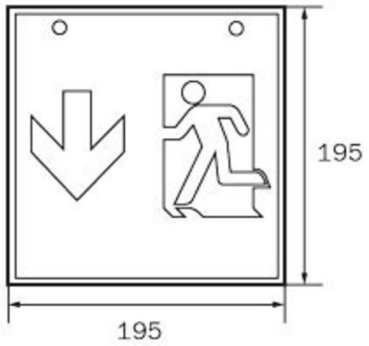


WG

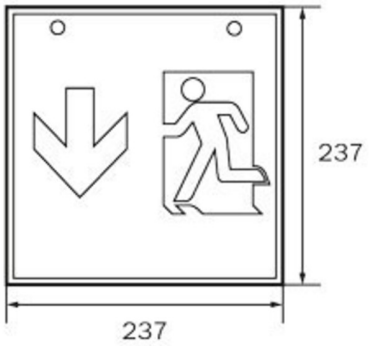


WK

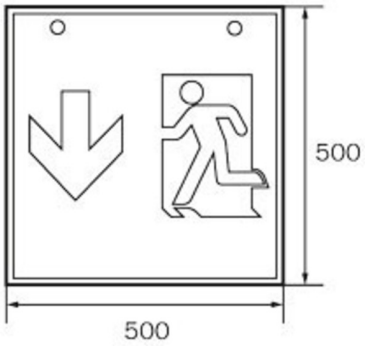


WX

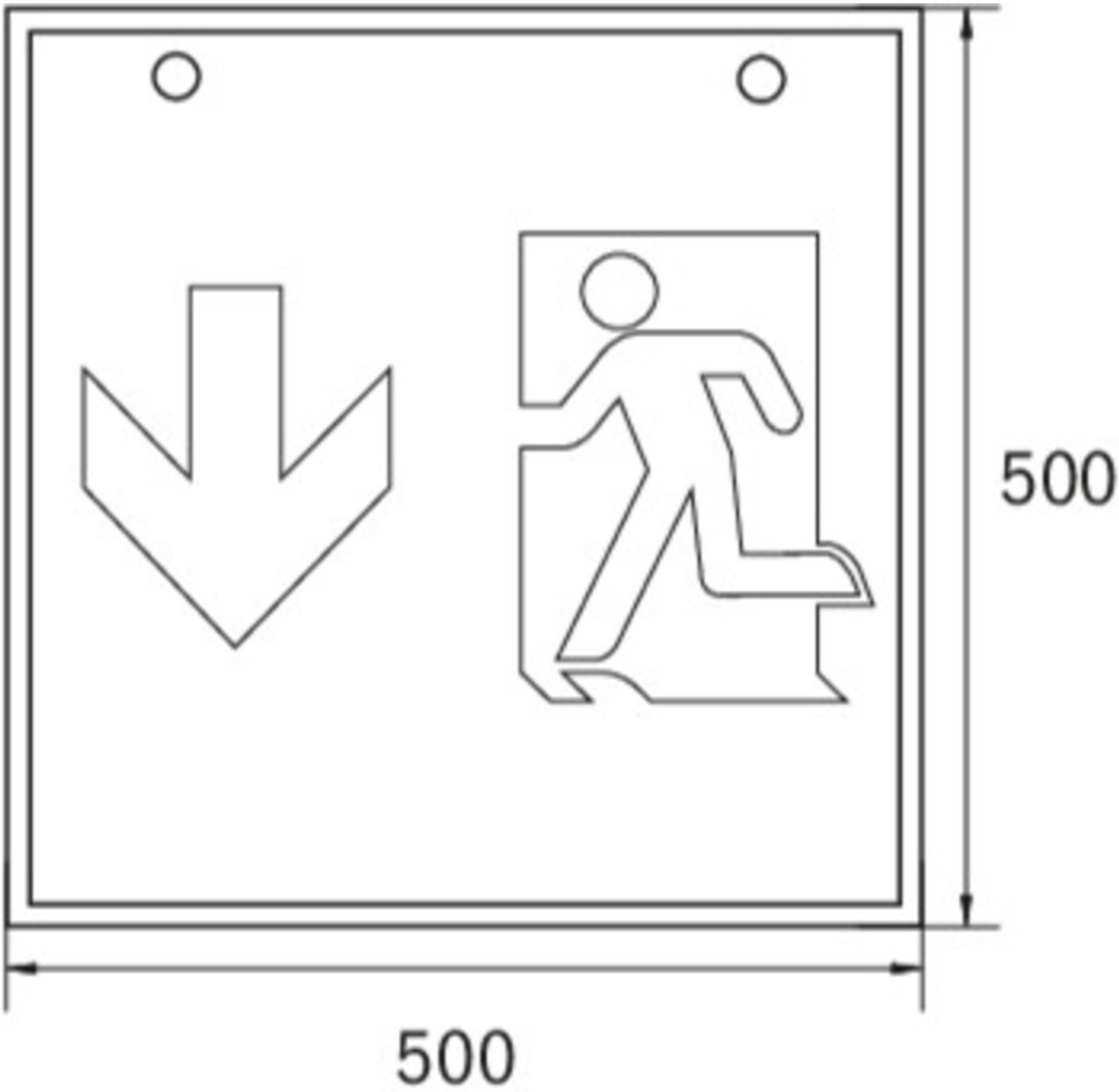


## ACCESSORY LIST

WKO - Set of chain eyelets for cube mounting (4 pieces)

1PV-EB - Pendulum

As of: 16.09.2026 - Subject to technical changes and errors.